KPF30UOR

Hood, Decorative wall hood, Portofino, Orange, 30 "



TYPE

Product family: Hood • Hood Type: Decorative wall hood • Hood width: 30 " • Extraction: Vented • EAN code: 8017709261795

AESTHETIC

Color: Orange • Aesthetic: Portofino • Design: Chimney • Material: Stainless steel • Stainless steel type: Brushed

PROGRAMS / FUNCTIONS

Speed levels: 4

CONTROLS

Control setting: Control knobs • Control knobs: Portofino • No. of controls: 2 • Controls color: Stainless steel effect

TECHNICAL FEATURES

No. of lights: 2 • Lighting: LED • Light power: 2 W • Light color temperature scale (°K): 4000 °K • Maximum extraction capacity at free mode: 577.5 CFM • Motor power: 455 W • No. of filters: 3 • Anti-grease filters: Stainless steel • Minimum distance from gas cooktop: 30 " • Vent outlet: 150 " • Minimum distance from electric cooktop: 26 " • No-return valve: Yes

© 2020 Smeg USA, Inc. - A&D Building - 150 East 58th Street - 10155 New York USA

ELECTRICAL CONNECTION

Electrical connection rating: 495 W • Voltage: 120 V • Frequency (Hz): 60 Hz • Power supply cable length: 39 3/8 "

OPTIONAL ACCESSORIES

SPEED LEVEL 1

Extraction rate: 210.5 CFM • Noise level: 53 dB(A) • Power: 207 W

SPEED 2

Extraction rate: 317 CFM • Noise level: 62 dB(A) • Power: 270 W

SPEED 3

Extraction rate: 437.5 CFM • Noise level: 69 dB(A) • Power: 350 W

SPEED LEVEL 4

Extraction rate: 573.5 CFM • Noise level: 75 dB(A) • Power: 479 W

LOGISTIC INFORMATION

Dimensions: 790x768x508 • Width: 30 1/4 " • Depth: 20 1/16 " • Height: 31 1/8 " • Net weight: 38 lbs

OPTIONAL

FLTK-1: Charcoal filter, Hoods

© 2020 Smeg USA, Inc. - A&D Building - 150 East 58th Street - 10155 New York USA

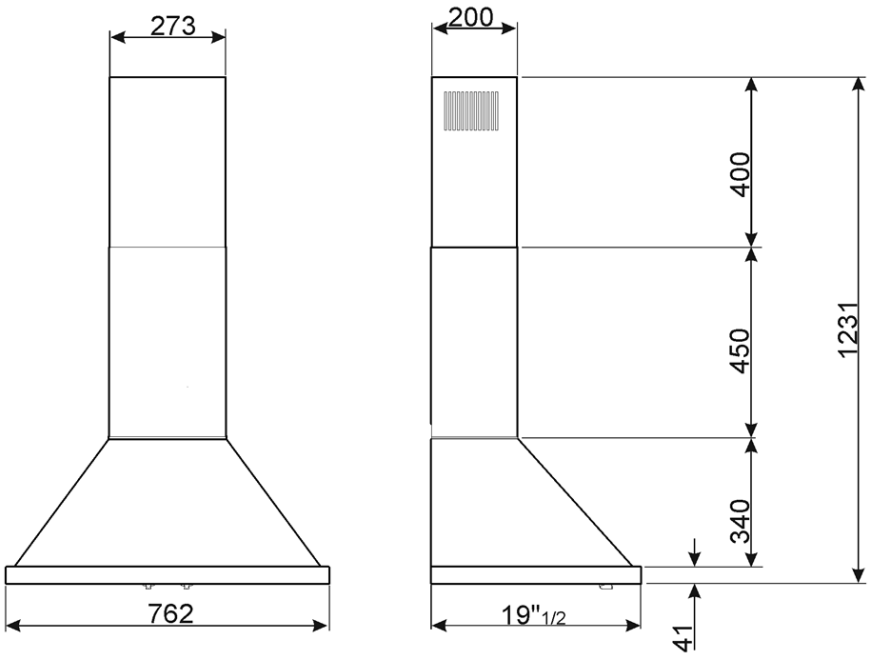

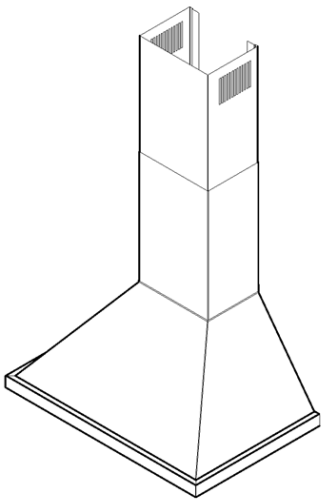

© 2020 Smeg USA, Inc. - A&D Building - 150 East 58th Street - 10155 New York USA

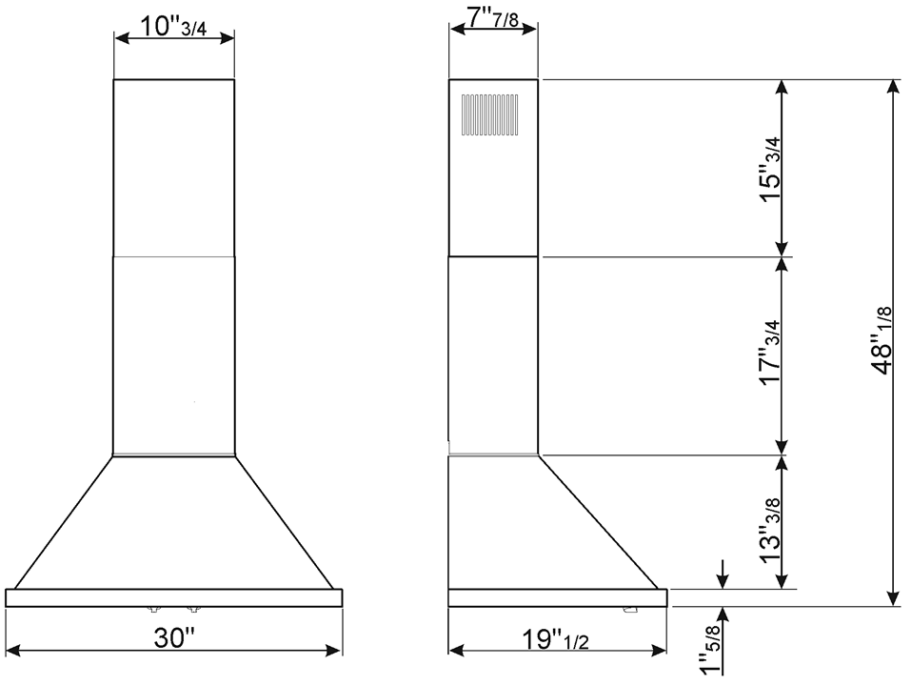

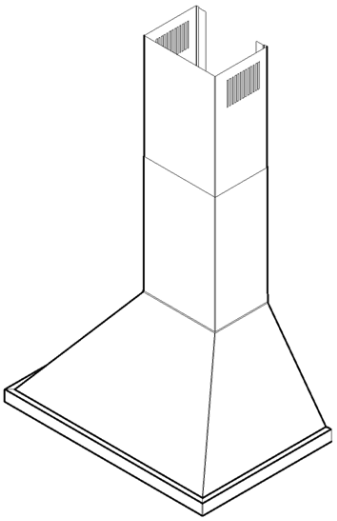

© 2020 Smeg USA, Inc. - A&D Building - 150 East 58th Street - 10155 New York USA