DVE53BB8900

Bespoke 7.6 cu. ft. Ultra Capacity Electric Dryer with AI Optimal Dry and Super Speed Dry

SAMSUNG

Available Colors

Silver Steel
DVE53BB8900T

Brushed Navy
DVE53BB8900D

Forest Green
DVE53BB8900G

Features

- Bespoke Design
- AI Optimal Dry
- Super Speed Dry
- AI Smart Dial
- MultiControl™
- Steam Sanitize+
- ENERGY STAR® Certified
- Shallow Closet-Depth Fit[1]
- Flexible Installation
- Wi-Fi Connectivity[2]
- Sensor Dry
- 7.6 cu. ft. Ultra Capacity
- Vent Sensor
- Lint Filter Indicator
- Stainless Steel Drum
- Premium Tempered Glass Door
- Internal Drum Light
- Drying Rack
- Reversible Dryer Door
- ADA Compliant[3]
- 20 Total Drying Cycles
- 14 Options
- 5 Temperature Settings
- 4-Way Venting (Back, Bottom, Left, Right)

Convenience

- Child Lock
- Filter Check Indicator

Ratings

ENERGY STAR® Rated:
608 kWh/yr

Electrical Requirements

240 V / 60 Hz
30 Amps

Specifications

20 Preset Drying Cycles:
Steam Refresh, Wrinkle Away, Steam Sanitize+, AI Optimal Dry, Super Speed, Eco Normal, Delicates, Normal, Heavy Duty, Towels, Permanent Press, Activewear, Bedding, Wool, Shirts, Denim, Time Dry, Air Fluff, Small Load, Rack Dry

14 Options:
Damp Alert, Wrinkle Prevent, AntiStatic, My Cycles, Smart Control, Eco Dry, Drum Light, Child Lock, Alarm, AI Pattern, Wi-Fi, Language, Vent Blockage Test, Factory Reset

5 Temperature Settings:
High, Medium, Medium Low, Low, Extra Low

5 Dry Levels:
Very Dry, More Dry, Normal Dry, Less Dry, Damp Dry

Warranty
One (1) Year Parts and Labor

Product Dimensions & Weight (WxHxD)
Dimensions: 27" x $38\frac{3}{4}$" x $31\frac{7}{16}$"
Weight: 121.3 lbs

Shipping Dimensions & Weight (WxHxD)
Dimensions: $29\frac{3}{8}$" x $42\frac{15}{16}$" x $34\frac{11}{16}$"
Weight: 130.1 lbs

Electric Dryer	Model #	UPC Code
Silver Steel	DVE53BB8900T	887276657264
Brushed Navy	DVE53BB8900D	887276657257
Forest Green	DVE53BB8900G	887276711645
Gas Dryer		
Silver Steel	DVG53BB8900T	887276657325
Brushed Navy	DVG53BB8900D	887276657318
Forest Green	DVG53BB8900G	887276711669
Matching Washer		
Silver Steel	WF53BG8900AT	887276652269
Brushed Navy	WF53BG8900AD	887276652252
Forest Green	WF53BB8900AG	887276711881

Optional Accessories	Model #	UPC Code
Silver Steel Pedestal	WE502NT	887276665283
Brushed Navy Pedestal	WE502ND	887276665276
Forest Green Pedestal	WE502NG	887276711676
Silver Steel Bespoke Stacking and MultiControl™ Combo Kit	SKK-9MCT	887276667379
Brushed Navy Bespoke Stacking and MultiControl™ Combo Kit	SKK-9MCD	887276667362
Forest Green Bespoke Stacking and MultiControl™ Combo Kit	SKK-9MCG	887276712819
Vent Kit	DV-2A	887276146416

[1]Designed to fit a 38" installation depth.

[2]Requires wireless network, Samsung account and SmartThings App. The Samsung SmartThings App supports Android OS 4.0 (ICS) or later which is optimized for Samsung smartphones (Galaxy S and Galaxy Note series). This app also supports iOS 7 or later for iPhone models. SmartThings App available in App Store and Play Store. Only monitoring enabled on Gas Dryers for safety reasons.

[3]ADA Compliant when using 27" wide riser. (Riser model codes: WE272NV, WE272NW, WE272NC)

DVE53BB8900

Bespoke 7.6 cu. ft. Ultra Capacity Electric Dryer with AI Optimal Dry and Super Speed Dry

SAMSUNG

Dimensions

Required dimensions for installation with pedestal:

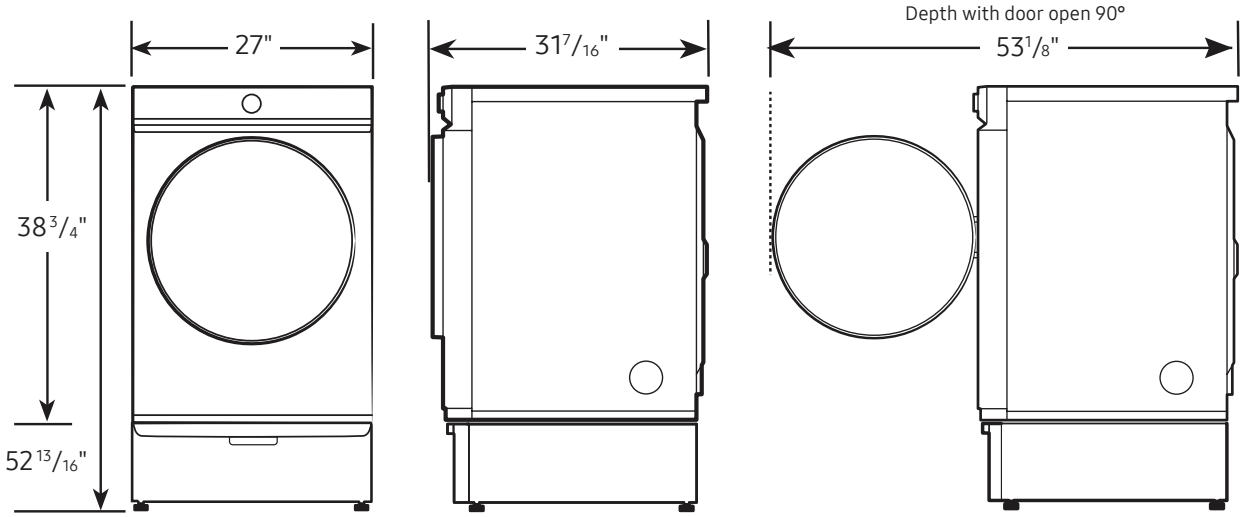

Installation Specifications – Side-by-Side

If the washer and dryer are installed together or the dryer alone, the closet front must have two unobstructed air openings for a combined minimum total area of 72-inch². Your washer alone does not require a specific air opening.

Alcove or closet installation

Minimum clearance for closet and alcove installations:

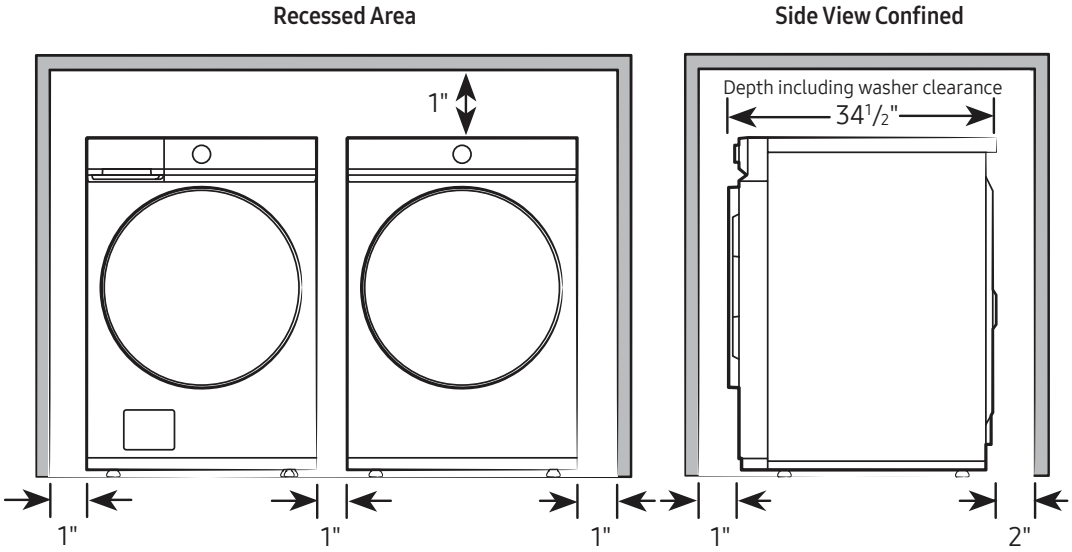

Connection Dimensions

Back and side view of dryer

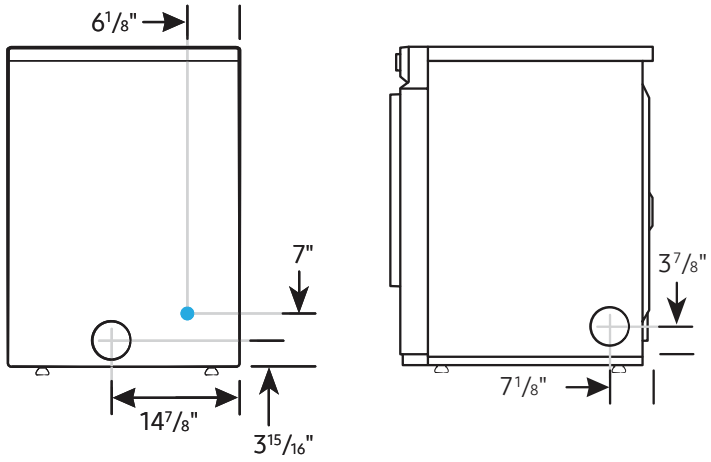

LEGEND:

● Cold Water Connection

Actual color may vary. Design, specifications, and color availability are subject to change without notice. Non-metric weights and measurements are approximate.

©2023 Samsung Electronics America, Inc., 85 Challenger Road, Ridgefield Park, NJ 07660. Tel: 800-SAMSUNG. samsung.com. Samsung is a registered trademark of Samsung Electronics Co., Ltd.

DVE53BB8900

Bespoke 7.6 cu. ft. Ultra Capacity Electric Dryer with AI Optimal Dry and Super Speed Dry

SAMSUNG

Installation Specifications – Stacked Pair

Clearances indicated are for stacked pairs. The closet front must have two unobstructed air openings for a combined minimum total area of 72-inch^2.

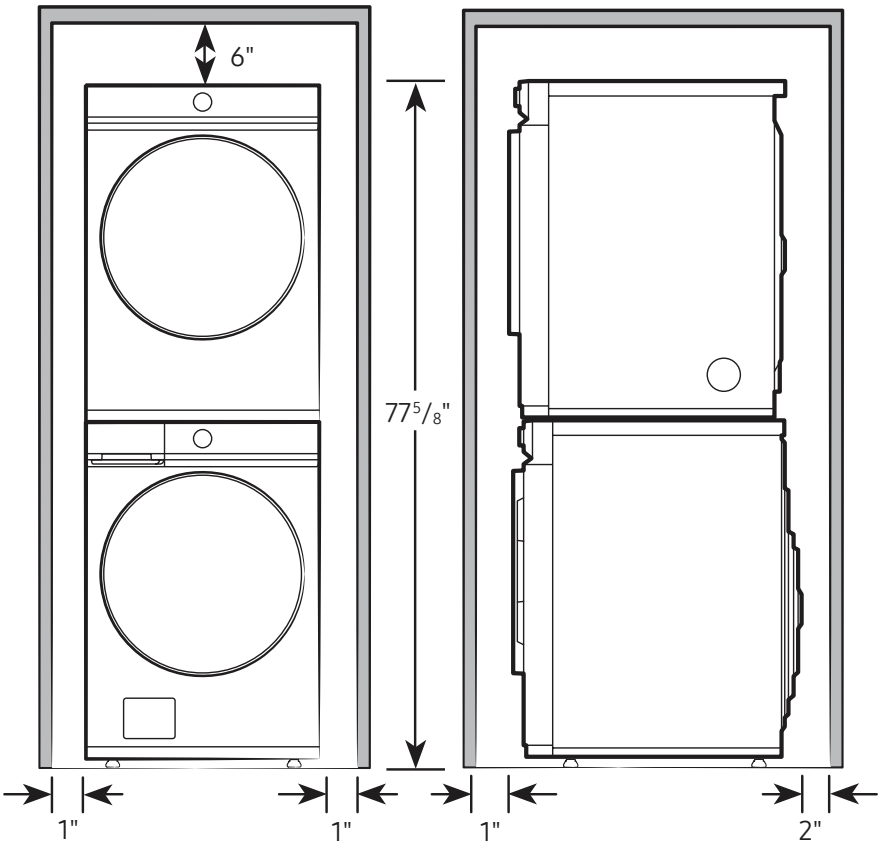

Connection Dimensions

Back and side views of stacked pair

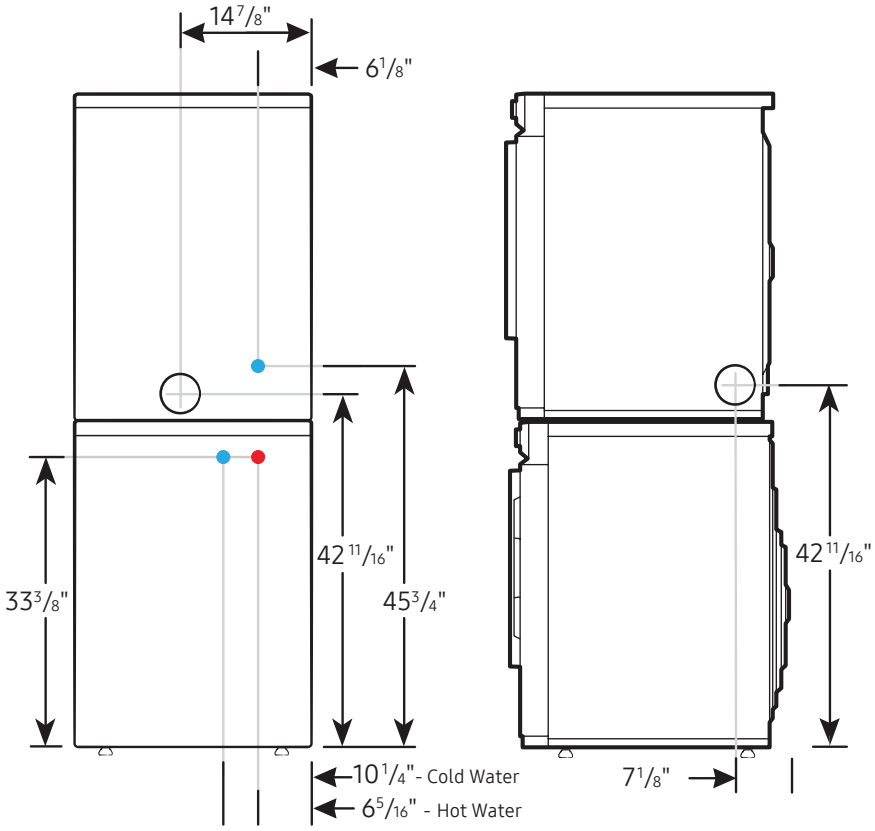

LEGEND:

- Cold Water Connection
- Hot Water Connection

Actual color may vary. Design, specifications, and color availability are subject to change without notice. Non-metric weights and measurements are approximate.

©2023 Samsung Electronics America, Inc., 85 Challenger Road, Ridgefield Park, NJ 07660. Tel: 800-SAMSUNG. samsung.com. Samsung is a registered trademark of Samsung Electronics Co., Ltd.