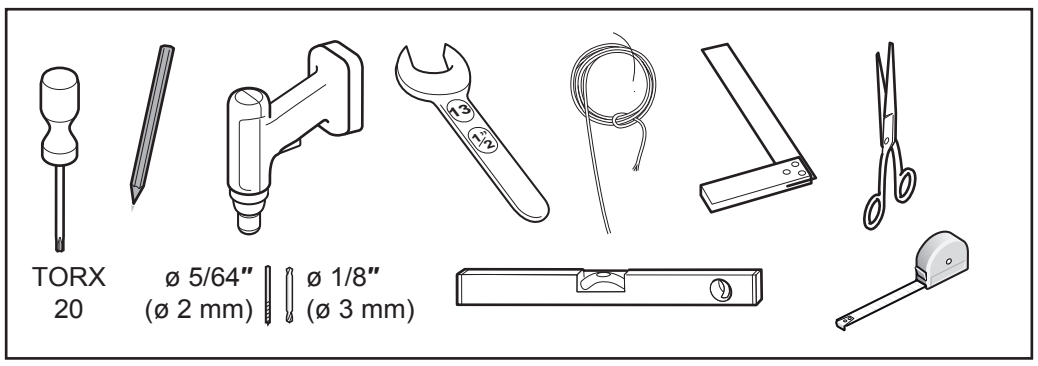

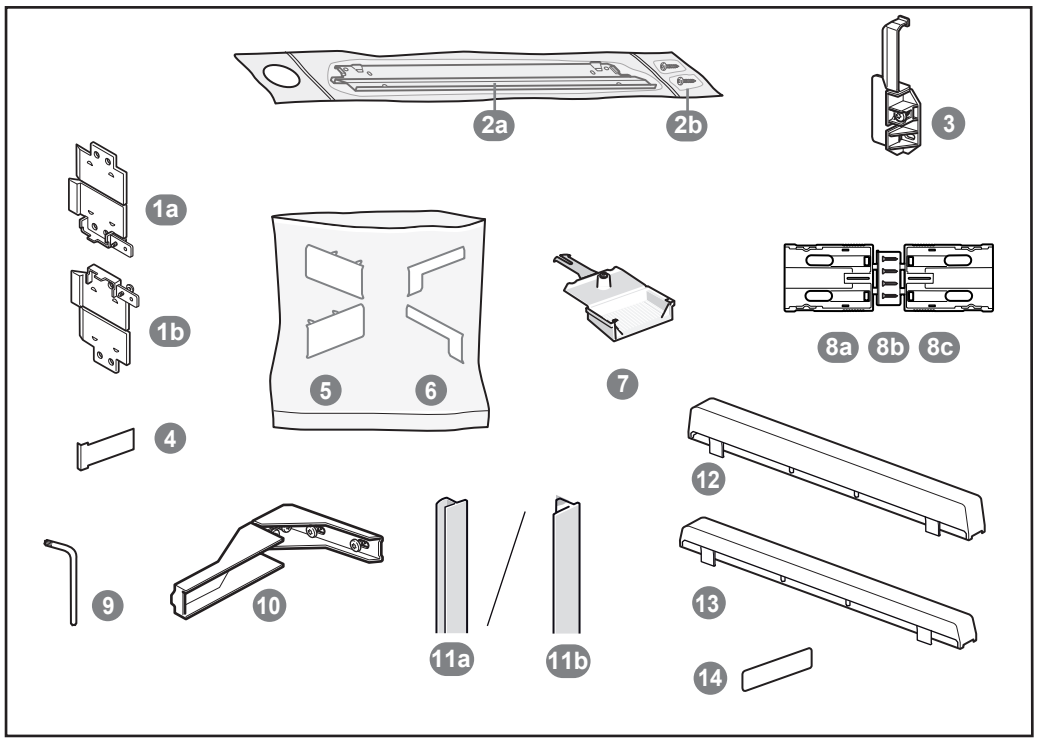

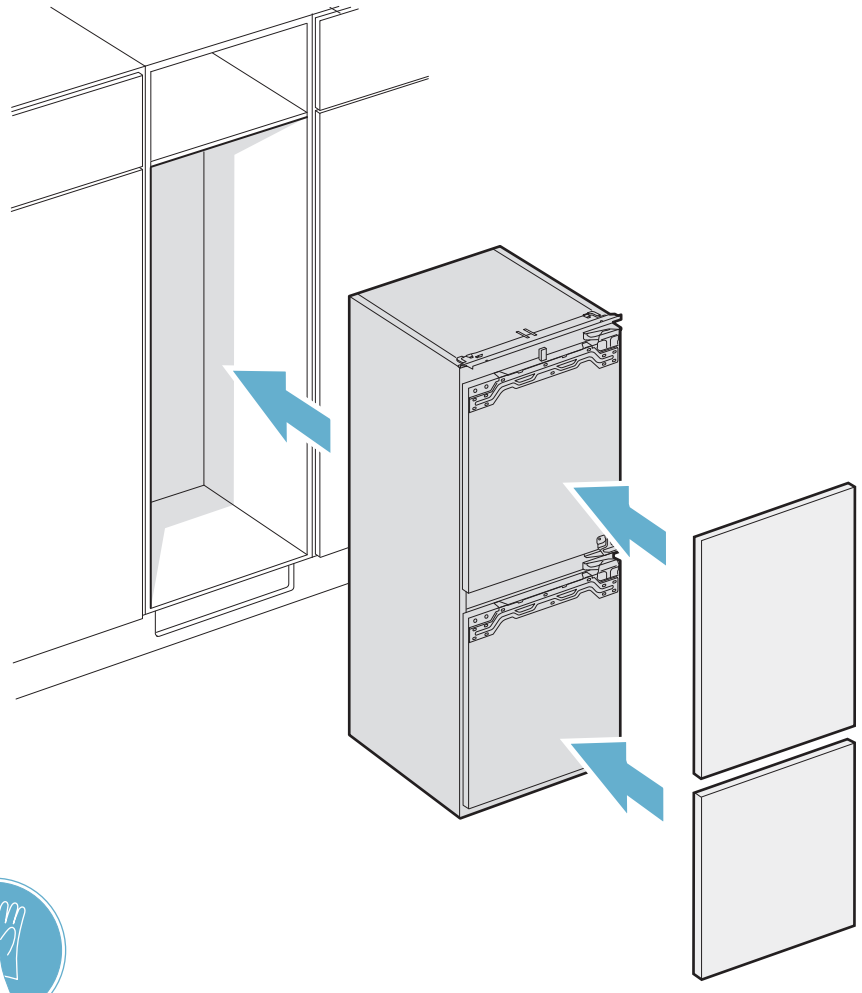

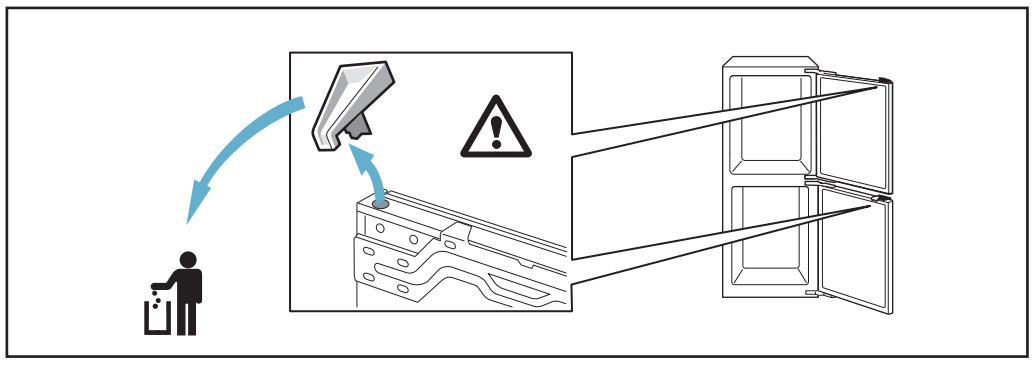

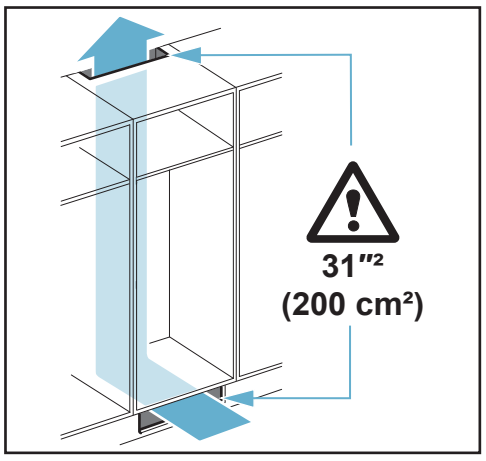

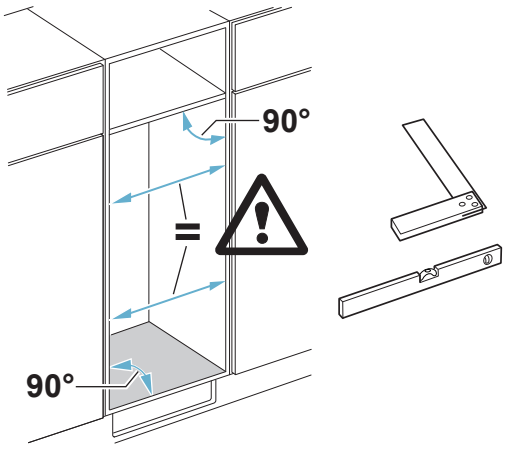

8001092483 (9710)

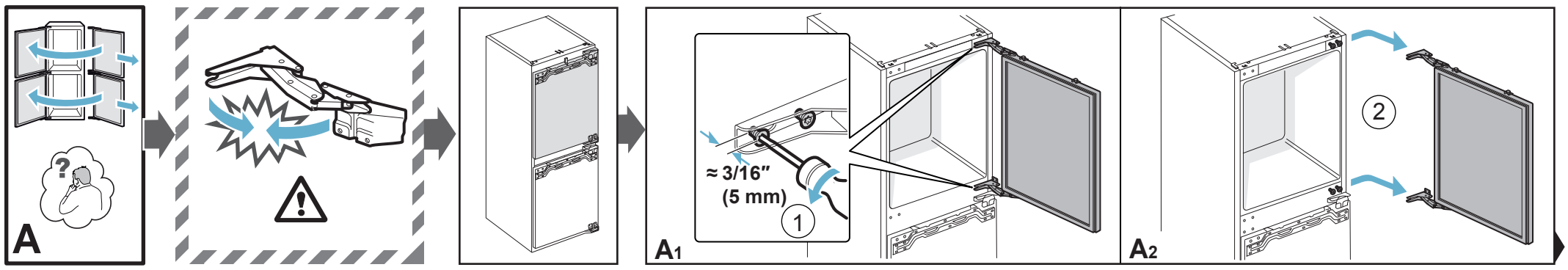

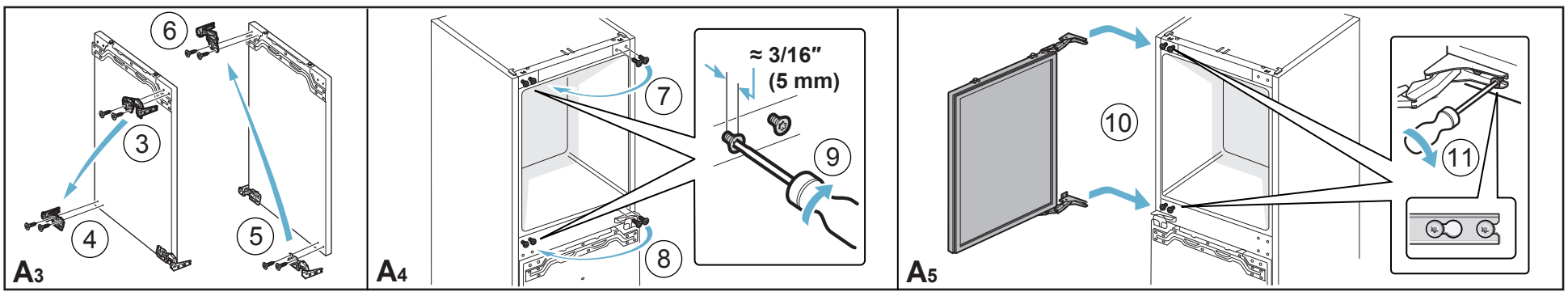

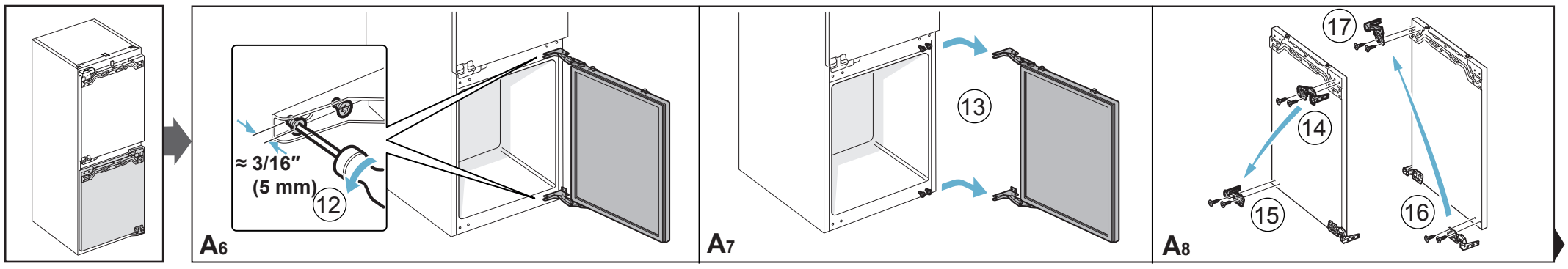

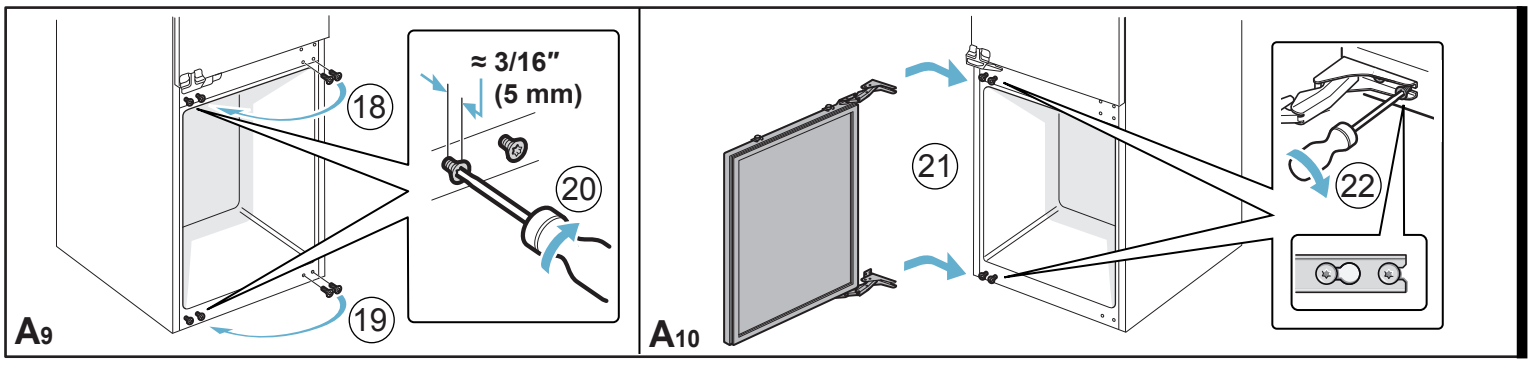

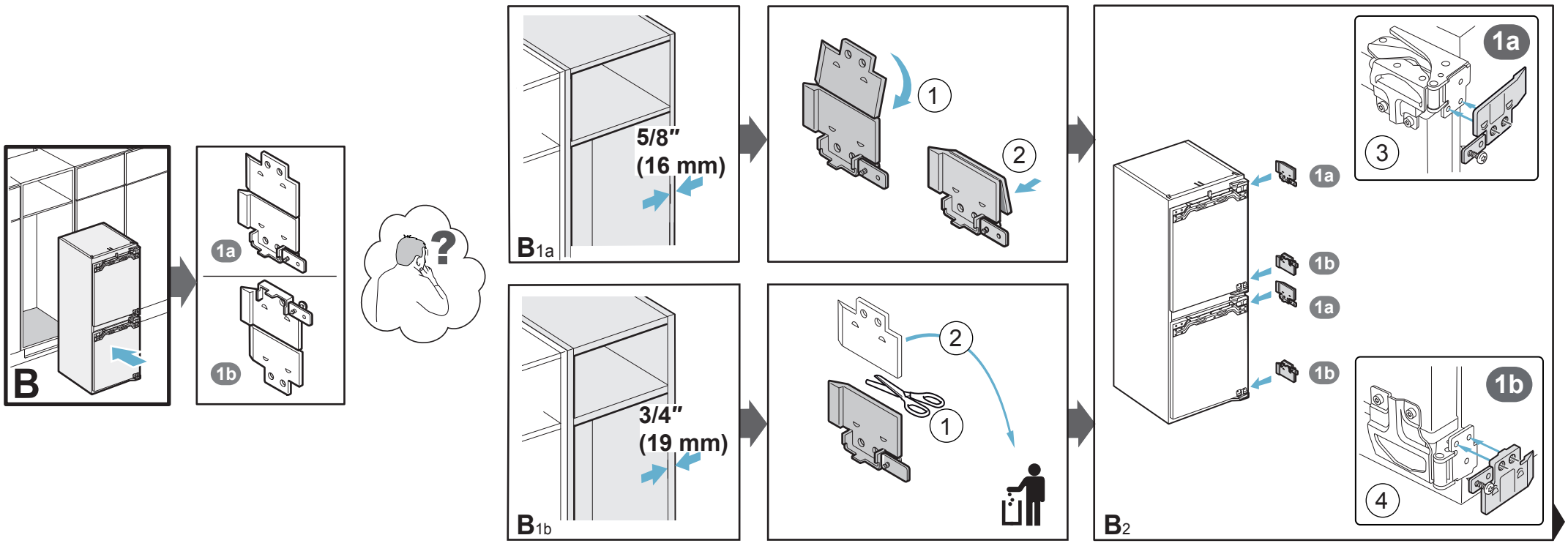
B
1a
1b
5/8"
(16 mm)
B1a
1
2
3/4"
(19 mm)
B1b
2
1
1a
1b
1a
1b
3
4
B2

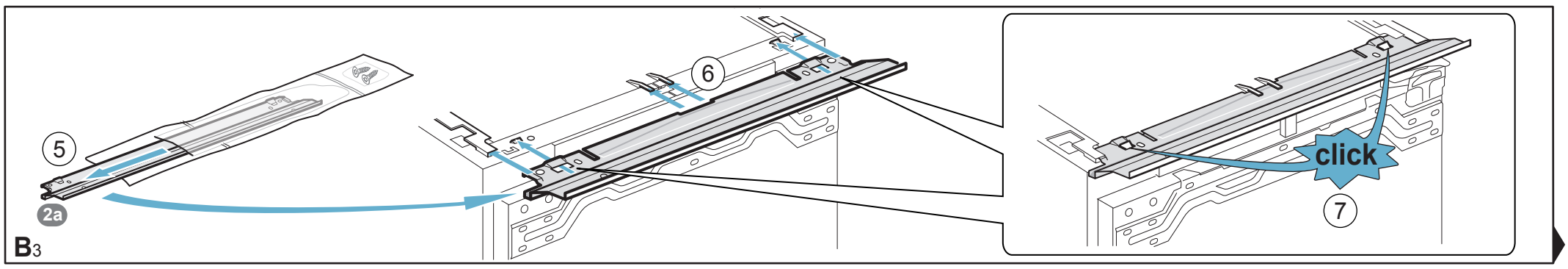
5
2a
6
click
7
B3

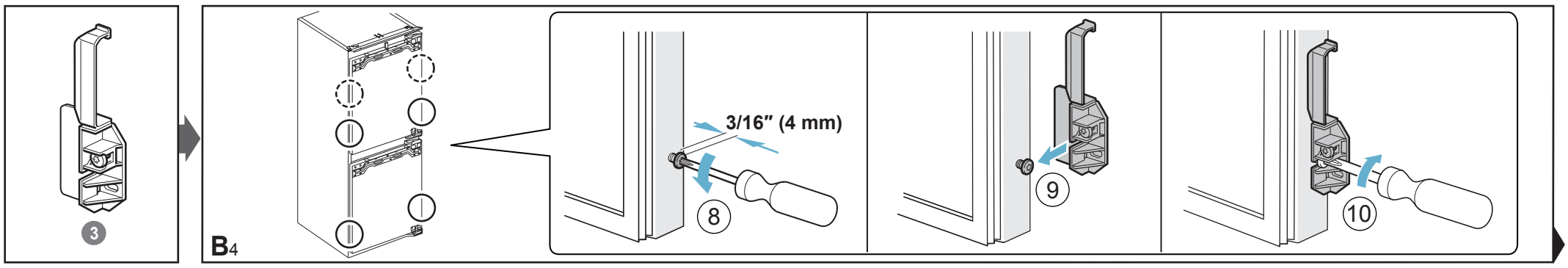
3
3/16" (4 mm)
8
9
10
B4

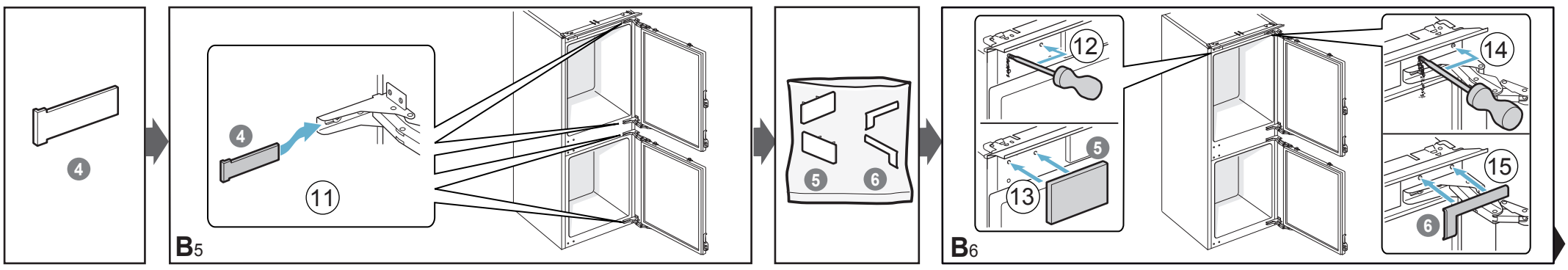
4
4
11
B5
5
6
12
13
5
14
15
6
B6

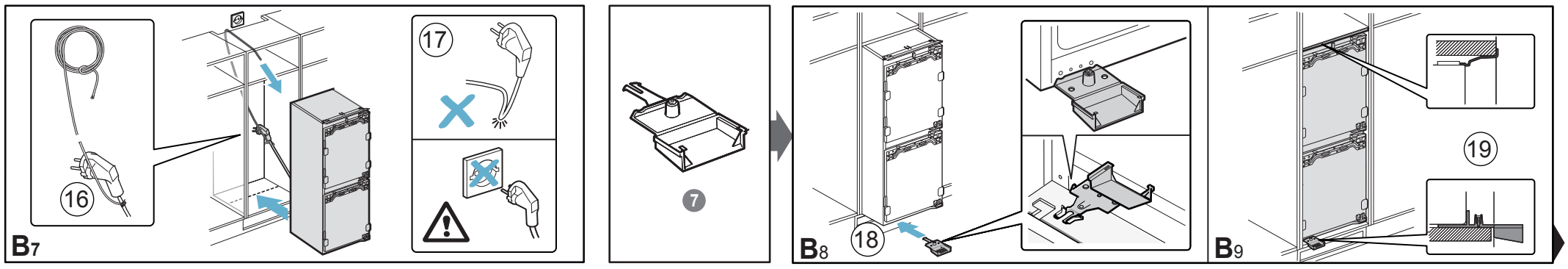
16
17
B7
7
18
B8
19
B9

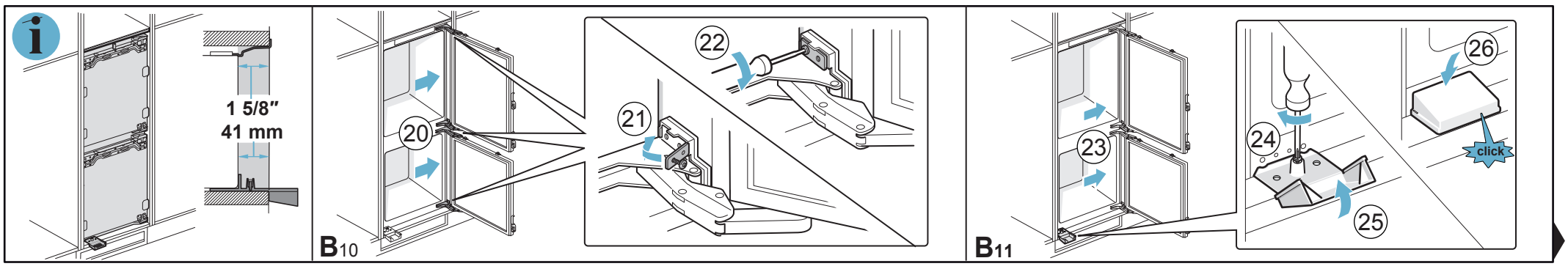
1 5/8"
41 mm
20
21
22
B10
23
24
25
26
click
B11

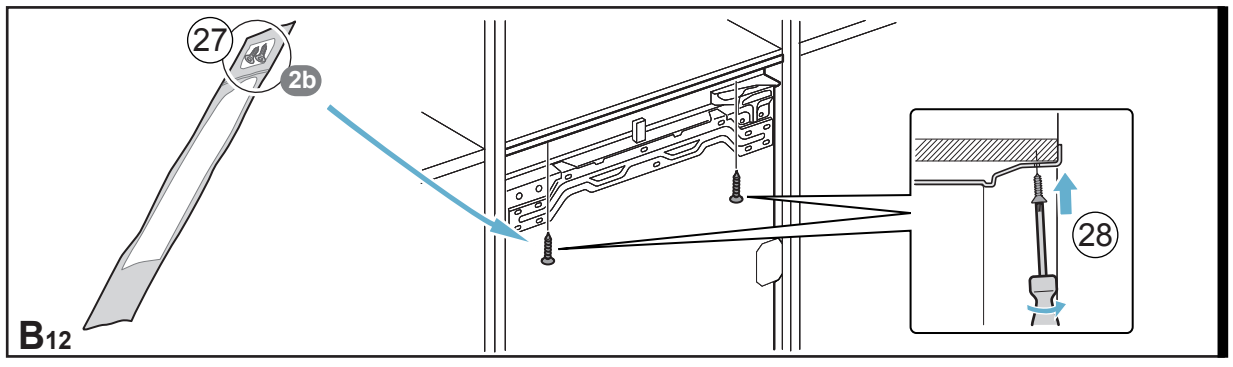
27
2b
28
B12

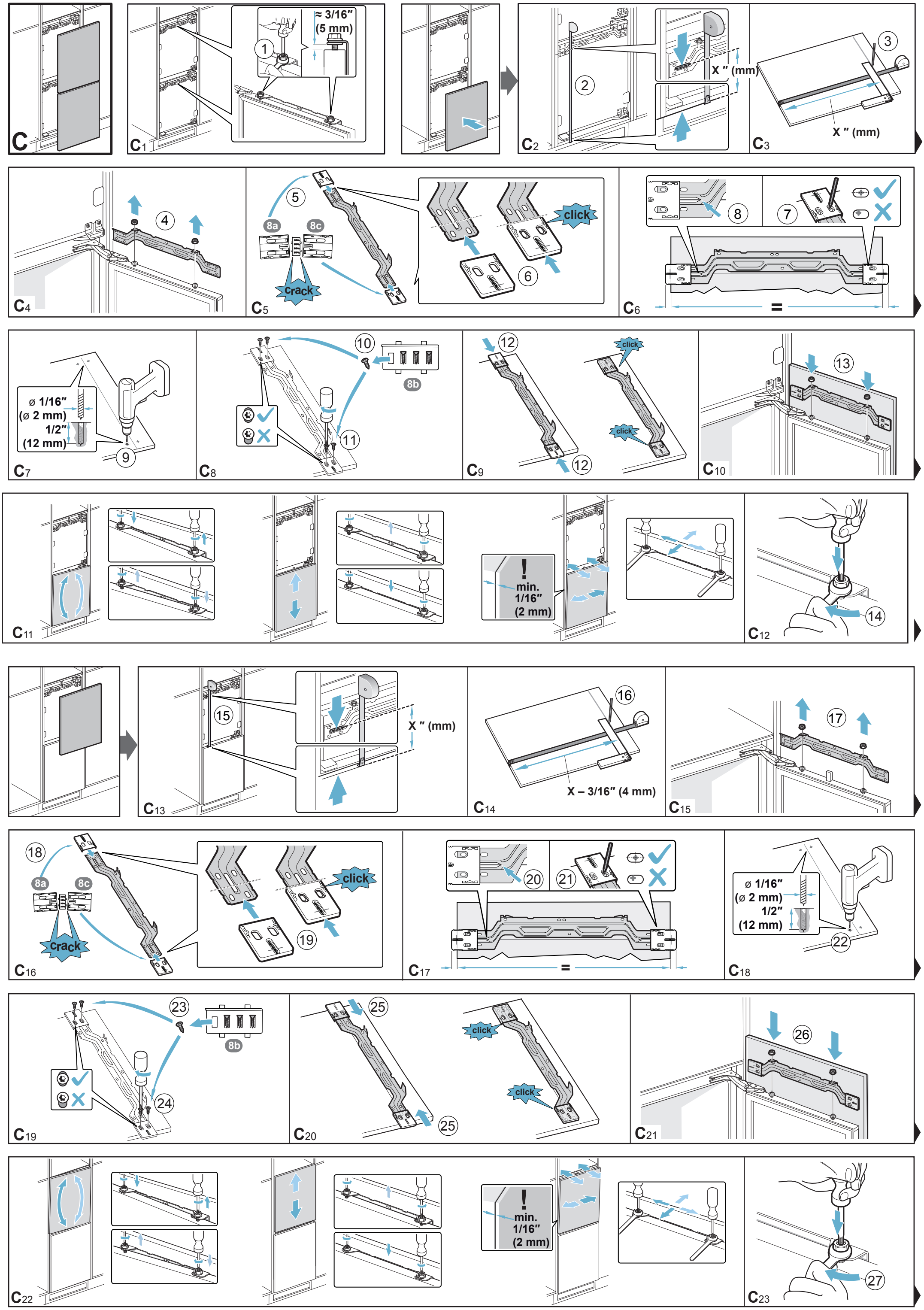
C
C1
≈ 3/16"
(5 mm)
1
C2
2
X " (mm)
C3
3
X " (mm)
C4
4
C5
5
8a
8c
Crack
click
6
C6
8
7
=
C7
ø 1/16"
(ø 2 mm)
1/2"
(12 mm)
9
C8
10
8b
11
C9
12
click
click
C10
13
C11
C12
!
min.
1/16"
(2 mm)
14
C13
15
X " (mm)
C14
16
X – 3/16" (4 mm)
C15
17
C16
18
8a
8c
Crack
click
19
C17
20
21
=
C18
ø 1/16"
(ø 2 mm)
1/2"
(12 mm)
22
C19
23
8b
24
C20
25
click
click
25
C21
26
C22
!
min.
1/16"
(2 mm)
C23
27

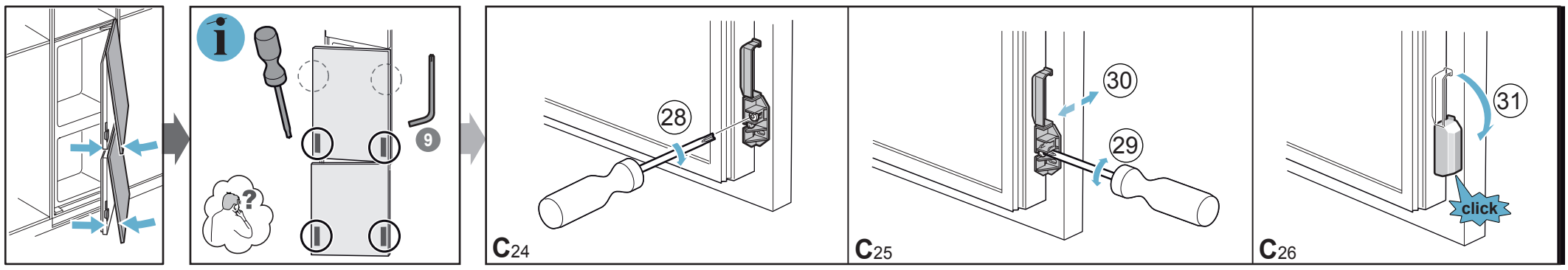
9
28
C24
30
29
C25
31
click
C26

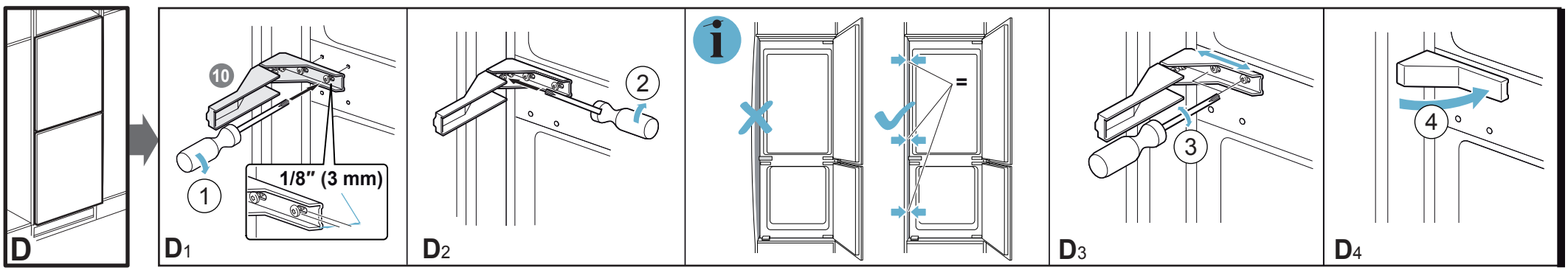
D
10
1
1/8" (3 mm)
D1
2
D2
=
3
D3
4
D4

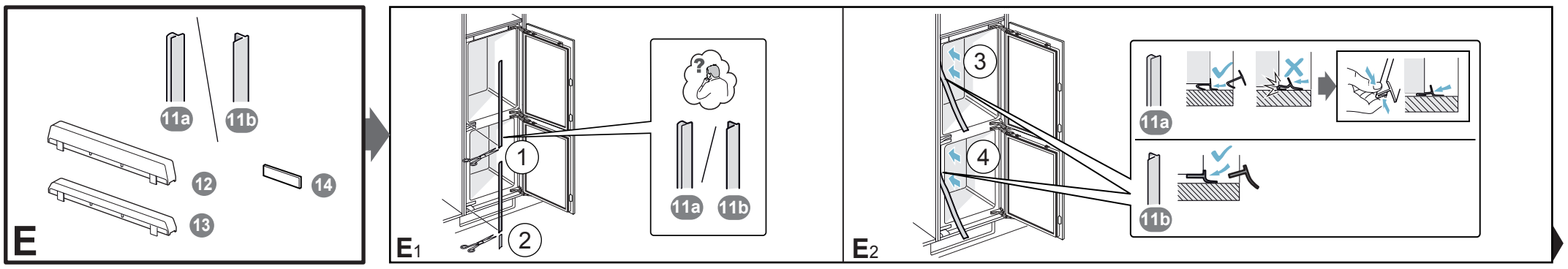
11a
11b
12
13
14
E
1
2
11a
11b
E1
3
4
11a
11b
E2

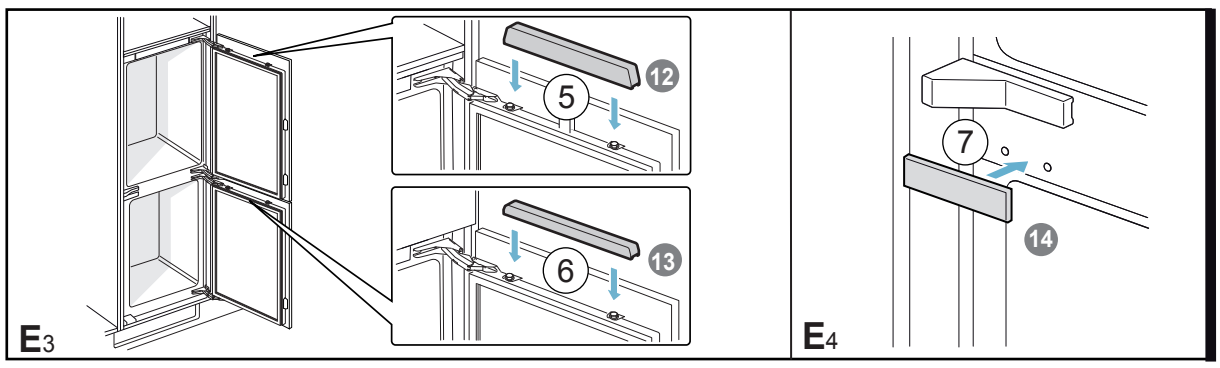
5
12
6
13
E3
7
14
E4

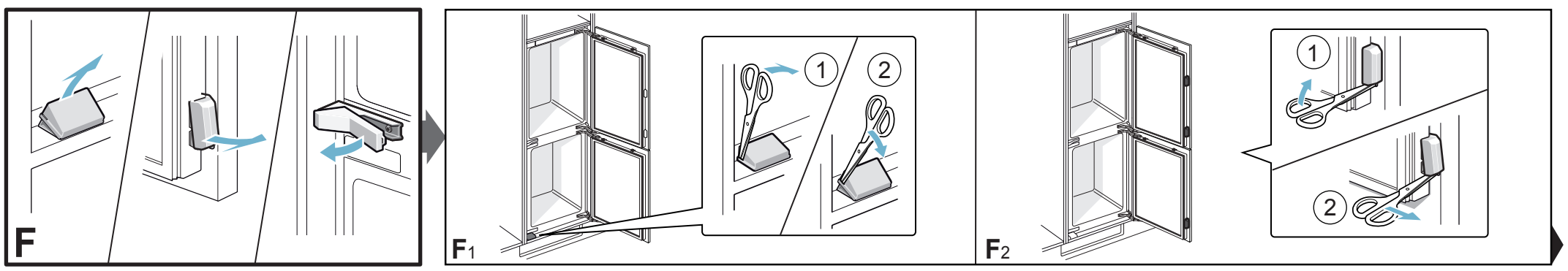
F
1
2
F1
1
2
F2

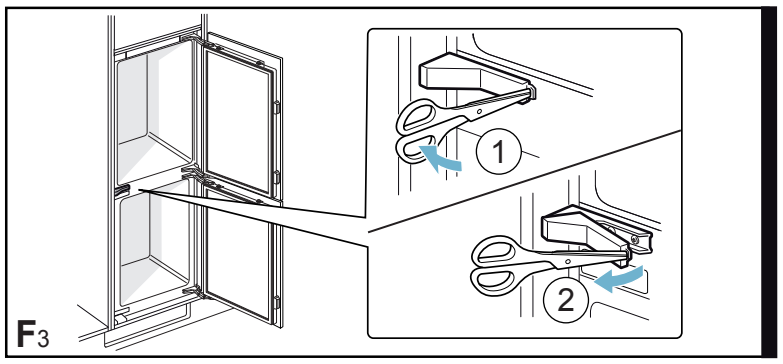
1
2
F3