CPRU330X

Drawer, Classic, Warming drawer, Stainless steel



TYPE

Product family: Drawer • Type: Warming drawer • Commercial height: 26 cm • a: 8017709283209

AESTHETIC

Color: Stainless steel • Finishing: Fingerprint-proof • Aesthetic: Classic • Material: Stainless steel • Stainless steel type: Brushed • Handle: Classic

PROGRAMS / FUNCTIONS

Keep warm: Yes • Warming drawer: Yes • Defrost: Yes • Dish warmer: Yes • Proof: Yes • Mug warmer: Yes

CONTROLS

Control setting type: Control knobs • No. of controls: 1 • Control color: Stainless steel effect

TECHNICAL FEATURES

Capacity: 56 l • Opening mechanism: With handle • Base material: Stainless steel • Max weight allowance: 15 kg • Maximum drawer loading weight: 235 kg • Included accessories: Rack, Silicone antislip mat

ELECTRICAL CONNECTION

Nominal power: 800 W • Voltage: 115 V • Frequency (Hz): 60 Hz

© 2020 Smeg USA, Inc. - A&D Building - 150 East 58th Street - 10155 New York USA

LOGISTIC INFORMATION

Width: 28 1/8 " • Depth: 24 7/16 " • Net weight: 72 lbs • Height: 10 1/16 "

© 2020 Smeg USA, Inc. - A&D Building - 150 East 58th Street - 10155 New York USA

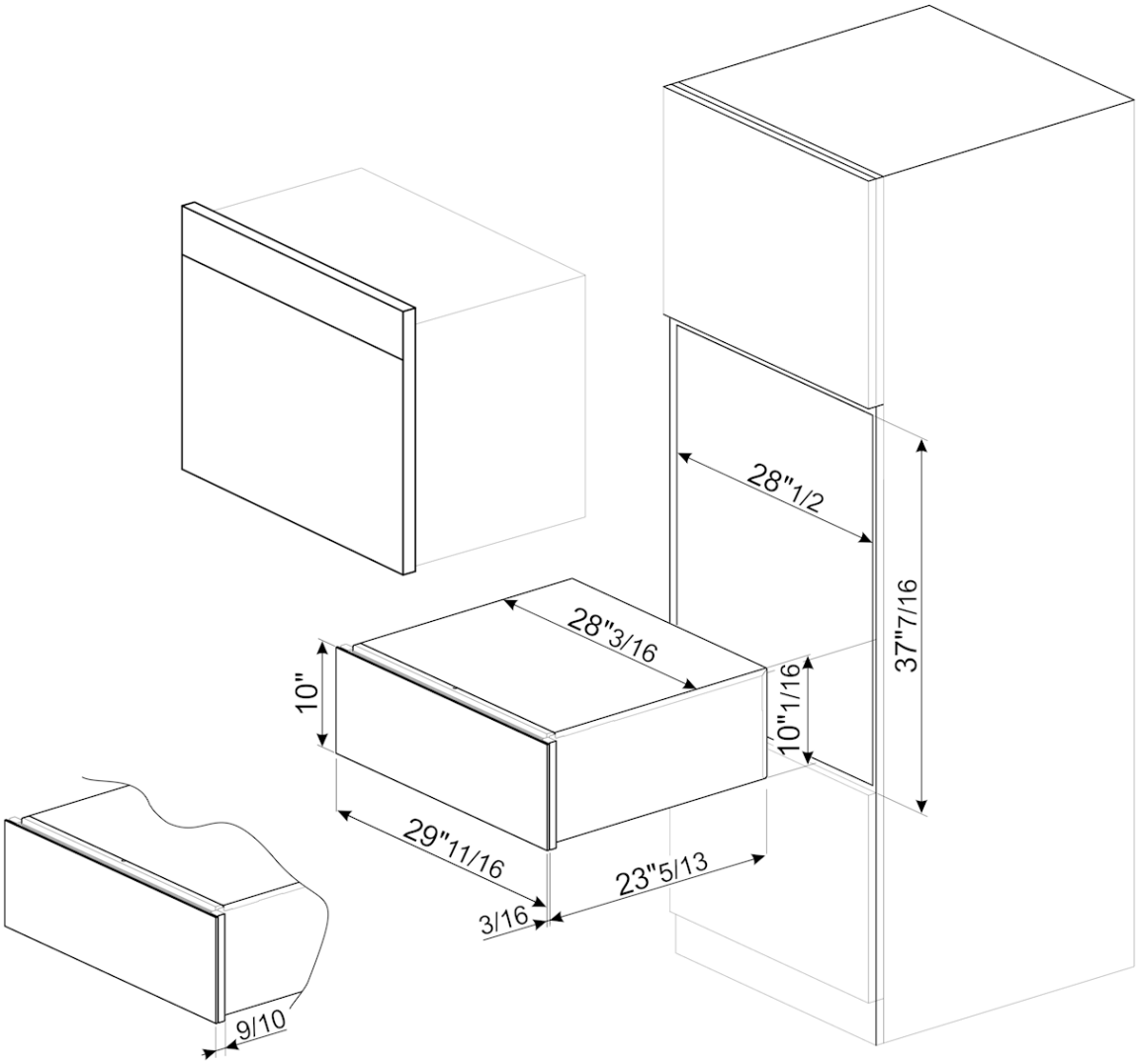

© 2020 Smeg USA, Inc. - A&D Building - 150 East 58th Street - 10155 New York USA

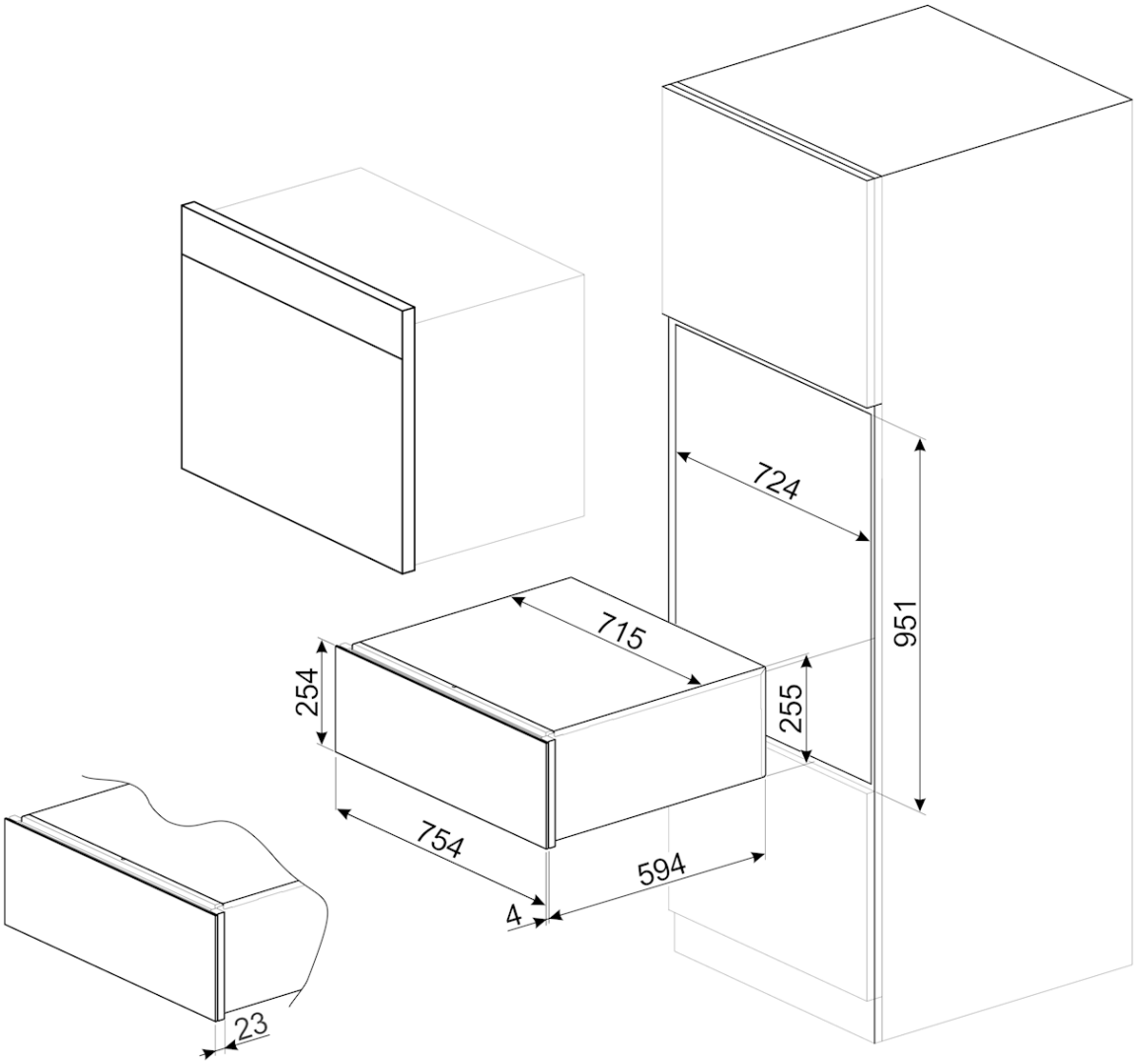

© 2020 Smeg USA, Inc. - A&D Building - 150 East 58th Street - 10155 New York USA