CMSU6451X

Coffee machine, Classic, Automatic, Stainless steel





TYPE

Product family: Coffee machine • Type: Automatic • Category: Compact • EAN code: 8017709206284

AESTHETIC

Color: Stainless steel • Finishing: Fingerprint-proof • Aesthetic: Classic • Stainless steel type: Brushed

PROGRAMS / FUNCTIONS

Beverage settings: 4 • Pre-heat infuser function: Yes • Single coffee: Yes • Double coffee: Yes • Automatic cappuccino maker with separate milk tank: Yes • Hot-water function: Yes • Pre-ground coffee option: Yes • Adjustable coffee intensity: 3 levels • Variable coffee size: 3 speed levels • Adjustable cappuccino foam: Yes, 3 levels • Automatic descaling: Yes • Automatic rinse: At every switch on/off • Pre-set automatic switch-on: Yes • Variable coffee temperature: 2 levels • Adjustable coffee grinder: Yes • Lack of water signal: Yes • Water hardness: Yes • Child lock: Yes

CONTROLS

Display: White LCD • Control setting type: Knobs / buttons • No. of controls: 2 • Control knobs color: Stainless steel effect • Number of buttons: 8 • Button color: Stainless steel effect

© 2020 Smeg USA, Inc. - A&D Building - 150 East 58th Street - 10155 New York USA

TECHNICAL FEATURES

Coffee grinder: Pro-style stainless steel conical grinder • Coffee granules compartment: Yes • Removable water container: Yes • Ground coffee compartment: Yes • Height-adjustable coffee dispenser: Yes • Coffee grounds container: 14 single, 7 double • Drip tray: Yes • Steam dispenser: Yes • Thermal carafe: Stainless steel, auto-clean system, 17 fl oz capacity • Heating system: Thermoblock + Steamer • Removable milk jug: Yes • Pump pressure: 217.6 psi • Water container capacity: 0.5 gal • Coffee bean container capacity: 7.1 oz • Lights: 2 • Lighting: LED • Installation: On telescopic guides with soft close

ELECTRICAL CONNECTION

Nominal power: 1350 W • Voltage: 120 V • Frequency (Hz): 60 Hz • Power cord length: 68 7/8 "

LOGISTIC INFORMATION

Dimensions: 455x595x380 • Width: 23 7/16 " • Depth: 14 15/16 " • Net weight: 51 lbs • Height: 17 15/16 "

© 2020 Smeg USA, Inc. - A&D Building - 150 East 58th Street - 10155 New York USA

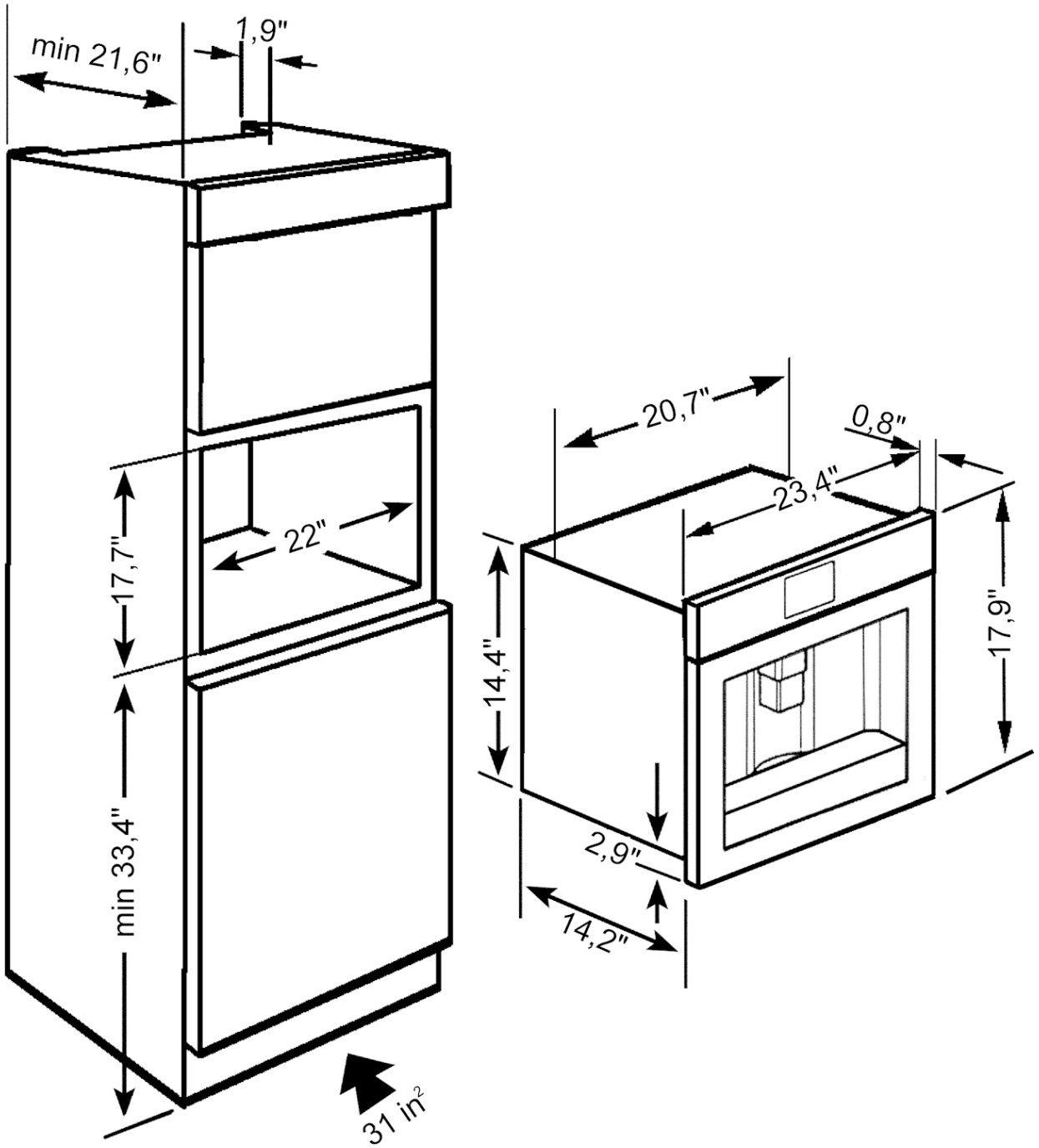

© 2020 Smeg USA, Inc. - A&D Building - 150 East 58th Street - 10155 New York USA