QUICK REFERENCE GUIDE

BI1215 • 15” Crescent Ice Maker • 1000 Series





STAINLESS
SOLID



INTEGRATED
SOLID



BLACK
SOLID



WHITE
SOLID

FEATURES & BENEFITS

PERFORMANCE

- Uses less than 3 gallons of water to produce up to 25 lbs of ice per day
- Up to 25 lbs in ice storage capacity
- Daily ice production rate is approx. 4 times greater than the average household refrigerator
- Crescent ice cube dimensions: ½” W x ¾” H x 2 ¼” L
- On/Off switch is conveniently located on lower face of unit

INTERIOR/EXTERIOR

- No drain required
- Standard commercial stainless steel handle is interchangeable with professional handle accessory
- Door swing is field reversible

INTEGRATION

- Unit is designed to be built-in or can be freestanding
- Integrated model requires ¾” custom door panel (panels not supplied by U-Line)
- Four independently adjustable leveling legs provide a precise undercounter fit
- Available in the following finishes: Stainless, Integrated, Black, or White

MODEL DETAILS

Model	Voltage/Hz	Door Swing	Finish	Shipping Weight
U-BI1215S-00B	115 / 60	Field Reversible	Stainless Solid	89 lb
U-BI1215INT-00B	115 / 60	Field Reversible	Integrated Solid	89 lb
U-BI1215B-00B	115 / 60	Field Reversible	Black Solid	89 lb
U-BI1215W-00B	115 / 60	Field Reversible	White Solid	89 lb

ACCESSORIES

Model	Description	Finish	Shipping Weight
23074	Professional Door Handle, 1 ¼” Diameter	Stainless	2 lb
23073	Commercial Door Handle, ⅞” Diameter	Stainless	2 lb
WATERHOOKUP	Braided water supply line kit	N/A	2 lb

QUICK REFERENCE GUIDE

U-LINE

1000 Series • 15” Crescent Ice Maker • **BI1215**

DIMENSIONS

Dimensions shown apply to all finishes, including Integrated (INT) models with ¾” integrated panel/frame installed.

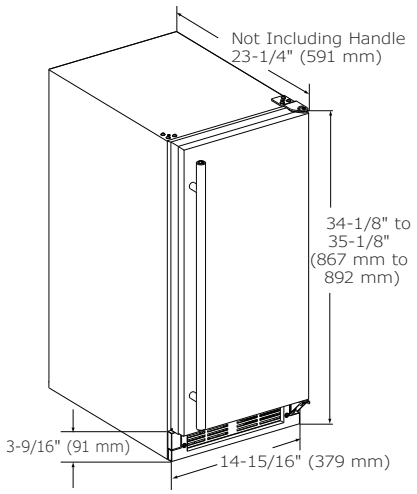

CABINET CUT-OUT

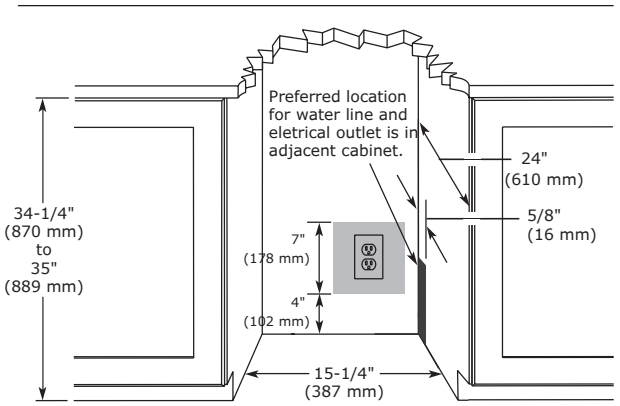

INSTALLATION NOTES

When installing adjacent to wall, ensure 2 ½” clearance on hinged side for 90° door opening, allowing ample room for door handle.
No additional clearance around sides, top or rear of unit is needed for ventilation.
Do not obstruct front grille air flow.

SPECIFICATIONS

Model	BI1215
Amps: Running	2.5
Control Type	On/Off Switch
Defrost Type	Manual
Dimensions: Product Depth	23 ¼" / 591 mm
Dimensions: Product Height	34 ⅛" / 867 mm
Dimensions: Product Width	14 15⁄16" / 379 mm
Energy Consumption: Avg. Per Year	N/A
ENERGY STAR	N/A
Ice Production Per Day	25 lb
Ice Storage	25 lb
Panel Height	30 ¼" / 768 mm
Panel Thickness	¾" / 20 mm
Panel Type	Solid Panel
Panel Width	14 ¾" / 375 mm
Product Weight: Max	83 lb
Refrigerant Type	R134a
Sabbath (Star K Certified)	No

ELECTRICAL REQUIREMENTS

This unit requires a grounded, polarized 115 VAC, 60 Hz, 15 A power supply (normal household current).

Please visit U-Line.com to view this model’s User Guide.
All specifications are subject to change without notice.

8900 North 55th Street • Milwaukee, Wisconsin 53223 USA • Phone +1.414.354.0300 • Fax +1.414.354.7905 • U-Line.com