USER GUIDE

SAFETY • INSTALLATION & INTEGRATION • OPERATING INSTRUCTIONS • MAINTENANCE • SERVICE



1000 Series • BI1215 • 15" Crescent Ice Maker

Contents

Intro

Safety

- Safety and Warning
- Disposal

Installation

- Environmental Requirements
- Electrical
- Cutout Dimensions
- Product Dimensions
- Side by Side Installation
- Water Hookup
- Anti-Tip Bracket
- General Installation
- Grille / Plinth Installation
- Door Swing
- Door Stop
- Door Adjust

Operating Instructions

- First Use
- Ice
- Airflow and Product Loading

Maintenance

- Cleaning
- Cleaning Condenser
- Extended Non-Use

Service

- Accessories
- Troubleshooting
- Warranty

WELCOME TO U-LINE

Congratulations on your U-Line purchase. Your product comes from a company with over five decades and three generations of premium modular ice making, refrigeration, and wine preservation experience. U-Line continues to be the American leader, delivering versatility and flexibility for multiple applications including residential, light commercial, outdoor and marine use. U-Line's complete product collection includes modular Wine Captain® Models, Beverage Centers, Clear Ice Machines, Crescent Ice Makers, Glass & Solid Door Refrigerators, Drawer Models, Freezers, and Combo® Models.

U-Line has captivated those with an appreciation for the finer things with exceptional functionality, style, inspired innovations and attention to even the smallest details. We are known and respected for our unwavering dedication to product design, quality and selection. U-Line is headquartered in Milwaukee, Wisconsin with a west coast office located in Laguna Beach, California and European support in Dublin, Ireland. U-Line has shipped product to five continents for over two decades and is proud to have the opportunity to ship to you.

PRODUCT INFORMATION

Looking for additional information on your product? User Guides, Quick Reference Guides, CAD Drawings, Compliance Documentation, and Product Warranty information are all available for reference and download at u-line.com under Documentation.

PROPERTY DAMAGE / INJURY CONCERNS

In the unlikely event property damage or personal injury is suspected related to a U-Line product, please take the following steps:

1. U-Line Customer Care must be contacted immediately at +1.800.779.2547.
2. Service or repairs performed on the unit without prior written approval from U-Line is not permitted. If the unit has been altered or repaired in the field without prior written approval from U-Line, claims will not be eligible.

SERVICE INFORMATION

Answers to Customer Frequently Asked Questions are available at u-line.com under Customer Care or you may contact our Customer Care group directly, contact information below.

GENERAL INQUIRIES

U-Line Corporation
8900 N. 55th Street
Milwaukee, Wisconsin 53223 USA
Monday - Friday 8:00 am to 4:30 pm CST
T: +1.414.354.0300
F: +1.414.354.7905
Email: sales@u-line.com
u-line.com

SERVICE & PARTS ASSISTANCE

Monday - Friday 8:00 am to 5:30 pm CST
T: +1.800.779.2547
F: +1.414.354.5696
Service Email: onlineservice@u-line.com
Parts Email: onlineparts@u-line.com

CONNECT WITH US

Designed, engineered and assembled in WI, USA

Safety and Warning

NOTICE

Please read all instructions before installing, operating, or servicing the appliance.

Use this appliance for its intended purpose only and follow these general precautions with those listed throughout this guide:

SAFETY ALERT DEFINITIONS

Throughout this guide are safety items labeled with a Danger, Warning or Caution based on the risk type:

⚠ DANGER

Danger means that failure to follow this safety statement will result in severe personal injury or death.

⚠ WARNING

Warning means that failure to follow this safety statement could result in serious personal injury or death.

⚠ CAUTION

Caution means that failure to follow this safety statement may result in minor or moderate personal injury, property or equipment damage.

Product Disposal and Recycling

⚠ DANGER

RISK OF CHILD ENTRAPMENT. Before you throw away your old refrigerator or freezer, take off the doors and leave shelves in place so children may not easily climb inside.

If the unit is being removed from service for disposal, check and obey all federal, state and local regulations regarding the disposal and recycling of refrigeration appliances, and follow these steps completely:

1. Remove all consumable contents from the unit.

2. Disconnect electric current to the unit's power receptacle. Unplug the electrical cord from its socket.

3. Remove the cabinet door.

Environmental Requirements

This unit is designed to operate between 50°F (10°C) and 100°F (37°C). Higher ambient temperatures may reduce the unit's ability to reach low temperatures and/or reduce ice production on applicable models.

For best performance, keep the unit out of direct sunlight and away from heat generating equipment.

In climates where high humidity and dew points are present, condensation may appear on outside surfaces. This is considered normal. The condensation will evaporate when the humidity drops.

⚠ CAUTION

Damages caused by ambient temperatures of 40°F (5°C) or below are not covered by the warranty.

Electrical

⚠ WARNING

SHOCK HAZARD — Electrical Grounding Required. Never attempt to repair or perform maintenance on the unit until the electricity has been disconnected.

Never remove the round grounding prong from the plug and never use a two-prong grounding adapter.

Altering, cutting of power cord, removal of power cord, removal of power plug, or direct wiring can cause serious injury, fire and or loss of property and or life, and will void the warranty.

Never use an extension cord to connect power to the unit.

Always keep your working area dry.

NOTICE

Electrical installation must observe all state and local codes. This unit requires connection to a grounded (three-prong), polarized receptacle that has been placed by a qualified electrician.

The unit requires a grounded and polarized 115 VAC, 60 Hz, 15A power supply (normal household current). An individual, properly grounded branch circuit or circuit breaker is recommended. GFCI (ground fault circuit interrupter) is usually not required for fixed location appliances and is not recommended for your unit because a GFCI could be prone to nuisance tripping. However, be sure to consult your local codes.

See CUT-OUT DIMENSIONS for recommended receptacle location.

Cutout Dimensions

PREPARE SITE

Your U-Line product has been designed for either free-standing or built-in installation. When built-in, your unit does not require additional air space for top, sides, or rear. However, the front grille must NOT be obstructed, and clearance is required for an electrical connection in the rear.

⚠ CAUTION

Unit can NOT be installed behind a closed cabinet door.

If you would like to align the face of the unit with other adjacent cabinet doors, you may need to alter the wall just behind the drain connection on the unit to accommodate the drain.

CUTOUT DIMENSIONS

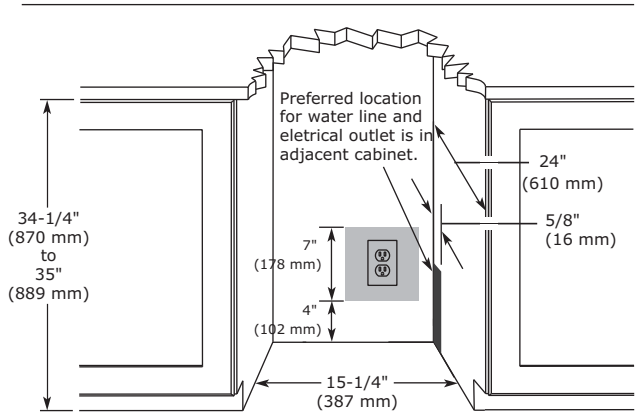

Product Dimensions

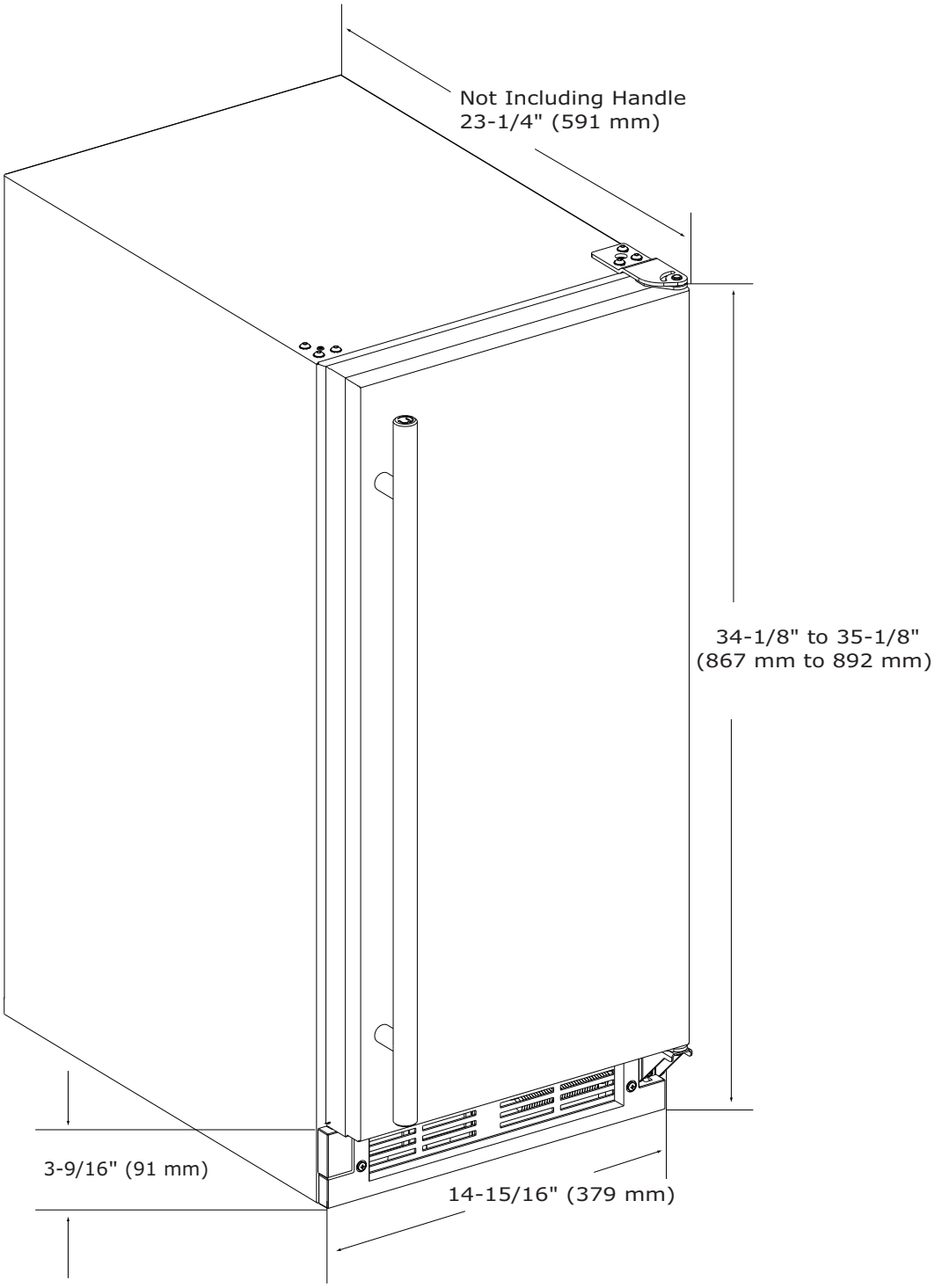

Side-by-Side Installation

Two units may be installed side-by-side.

Cutout width for a side-by-side installation is the cutout dimension of a single unit times two.

No trim kit is required. However, 1/4" (6 mm) of space needs to be maintained between the units to ensure unobstructed door swing.

Units must operate from separate, properly grounded electrical receptacles placed according to each unit's electrical specifications requirements.

Side-by-Side Installation with Bracket

1. Slide both units out so screws on top of units are easily accessible.

2. Remove screws as shown below.

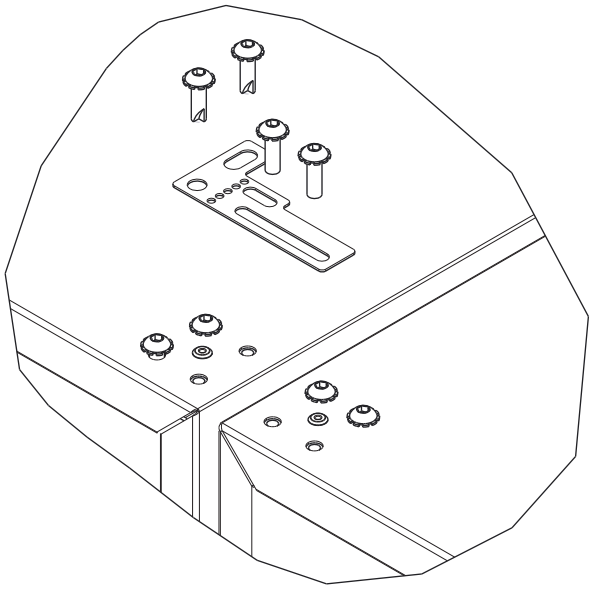

3. Place bracket over holes and attach to unit with two screws removed in step 2 using a T-25 Torx driver. Tighten screws fully.

4. Gently push units into position. Be careful not to entangle the electrical cord or water line, if applicable.

5. Re-check the leveling, from front to back and side to side. Make any necessary adjustments. The unit's top surface should be approximately 1/8" (3 mm) below the countertop.

Water Hookup

PREPARE PLUMBING

The water valve in this unit uses a standard 1/4" (6.35 mm) compression fitting. U-Line recommends a braided stainless steel water supply line. P/N (WATERHOOKUP).

⚠ CAUTION

Plumbing installation must observe all state and local codes. All water and drain connections MUST BE made by a licensed/qualified plumbing contractor. Failure to follow recommendations and instructions may result in damage and/or harm.

Water Supply Connection

When connecting the water supply, please note the following:

- Before installing the unit and connecting to the cold water supply, review the local plumbing codes.
- The water pressure should be between 20 and 120 psi.
- The water line MUST have a shut-off valve in the supply line.
- The water line should be looped into 2 coils. This will allow the unit to be removed for cleaning and servicing. Make certain that the tubing is not pinched or damaged during installation.

⚠ CAUTION

Do not use any plastic water supply line. The line is under pressure at all times. Plastic may crack or rupture with age and cause damage to your home.

Do not use Teflon tape or joint compound on the water fitting. The rubber washer provides an adequate seal. Other materials could cause blockage of the valve.

Failure to follow recommendations and instructions may result in damage and/or harm, flooding or void the product warranty.

⚠ CAUTION

Turn off water supply and disconnect electrical supply to unit prior to installation.

Use caution when handling back panel. The edges could be sharp.

1. Turn off water supply and disconnect electrical supply to product prior to attempting installation.
2. Remove the back panel.
3. Locate water valve inlet.

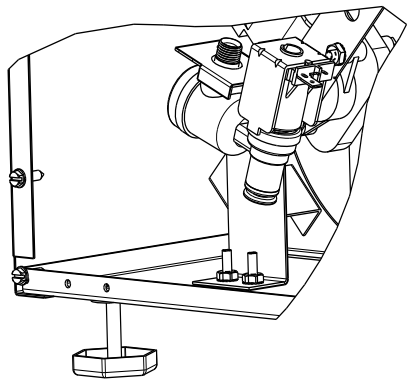

4. Break away filler feature in bushing with flat screwdriver.

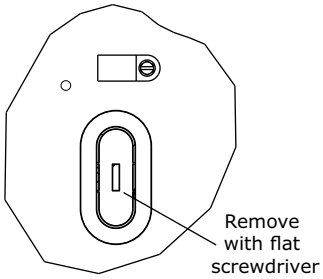

5. Thread water line through back panel hole (with bushing).

6. Locate water valve inlet and connect to valve.

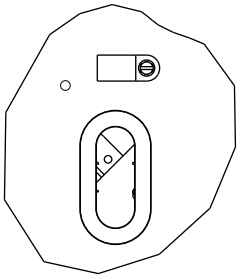

7. Turn on water supply and check for leaks.

8. Reinstall back panel.

9. Install retaining clip.

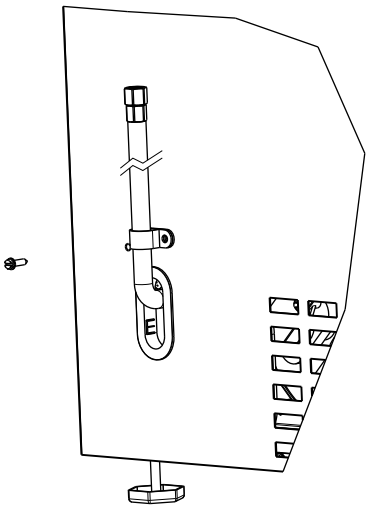

Anti-Tip Bracket

1. Slide unit out so screws on top of unit are easily accessible.

2. Remove the two screws from the opposite side of the hinge assembly using a slotted screwdriver (see below).

Note: 1224 models shown with four screw, 1215 models only have three screws, but same screws are used in both applications.

Right handed units shown, Left handed units are mirrored.

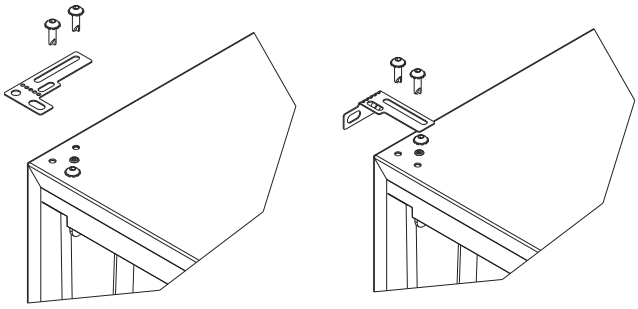

3. Place bracket (part #14154) over holes and attach to unit with two screws removed in step 2 using a slotted screwdriver. Tighten screws fully.

4. Gently push unit into position. Be careful not to entangle the electrical cord, or water line if applicable.

5. Recheck the leveling, from front to back and side to side. Make any necessary adjustments. The unit's top surface should be approximately 1/8" (3 mm) below the counter top.

6. Secure bracket into adjoining surface.

General Installation

LEVELING INFORMATION

1. Use a level to confirm the unit is level. Level should be placed along top edge and side edge as shown.

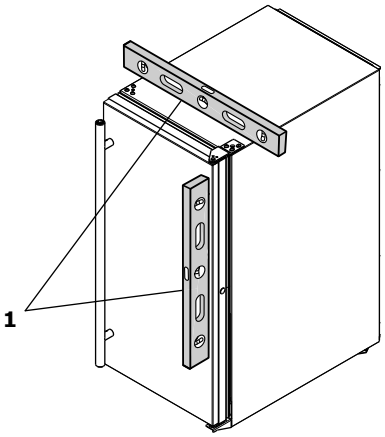

2. If the unit is not level, adjust the feet on the corners of the unit as necessary.

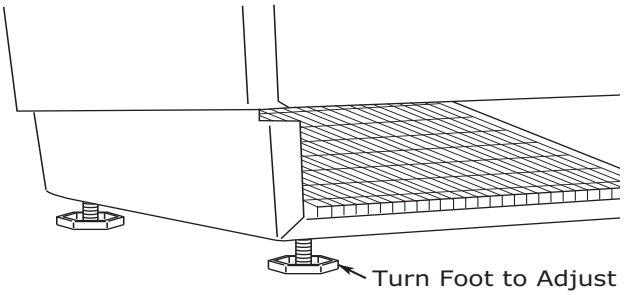

3. Confirm the unit is level after each adjustment and repeat the previous steps until the unit is level.

INSTALLATION TIP

If the room floor is higher than the floor in the cutout opening, adjust the rear feet to achieve a total unit rear height of 1/8" (3 mm) less than the opening's rear height. Shorten the unit height in the front by adjusting the front feet. This allows the unit to be gently tipped into the opening. Readjust the front feet to level the unit after it is correctly positioned in the opening.

INSTALLATION

This model is intended for indoor/interior applications only and is not to be used in installations that are open/ exposed to natural elements.

1. Open the water supply valve in the main water source.

2. Plug in the power cord.

3. Gently push the unit into position. Be careful not to kink the water supply line or entangle the power cord.

4. Re-check the leveling, from front to back and side to side. Make any necessary adjustments. The unit's top surface should be approximately 1/8" (3 mm) below the countertop.

Grille - Plinth Installation

REMOVING AND INSTALLING GRILLE

⚠ WARNING

Disconnect electric power to the unit before removing the grille.

⚠ WARNING

DO NOT touch the condenser fins (4). The condenser fins are SHARP and can be easily damaged.

Removing the grille

1. Disconnect power to the unit.
2. Loosen the two screws (1).
3. Remove grille (2) and grille cap (3) from unit.

Installing the grille

1. Make sure grille cap (3) is behind grille in slots (2) provided in grille before attaching grille to unit.
2. Align cabinet and grille holes and secure, but do not over tighten grille screws (1).
3. Reconnect power to the unit.

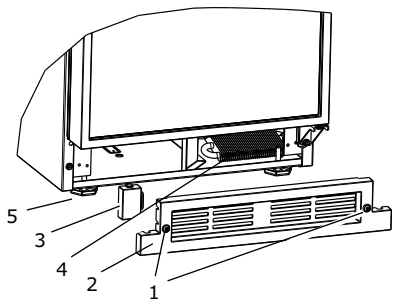

Door Swing

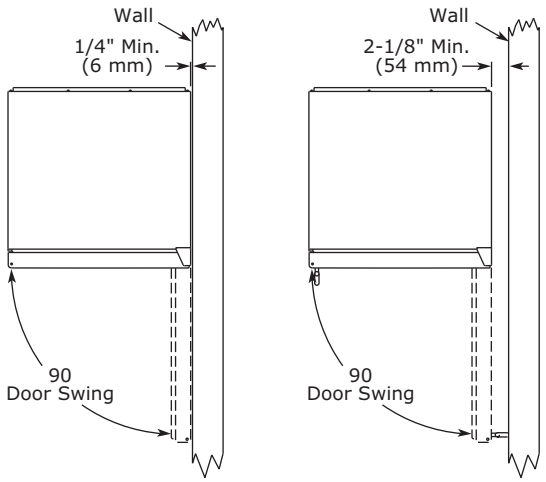

Units have a zero clearance for the door to open 90°, when installed adjacent to cabinets.

Stainless Steel and black and white models require 2-1/8" (54 mm) door clearance to accommodate the handle if installed next to a wall.

Integrated models require 1/4" (6 mm) clearance if installed next to a wall. Allow for additional space for any knobs or pulls installed on the integrated panel/frame.

Door Stop

Your U-Line unit was shipped to you with the optional 90° pin(s). (Models that are 15" wide include 1 pin. Models that are 24" wide include 2 pins.) The unit's door will open freely without a fixed opening angle limitation. If you would like the door stop at 90° follow these instructions.

NOTICE

The pin is designed to stop the door at 90° under normal operating conditions. It is not designed for excessive force. Do not use the door to move the unit in/out of the cutout during installation.

If your unit is already undercounter, it might need to be moved out/forward to access the hinge.

1. Locate the threaded pin.

2. With the door between 0° (closed) and 90° and using a 3/32" hex driver, install the threaded pin through the hinge.

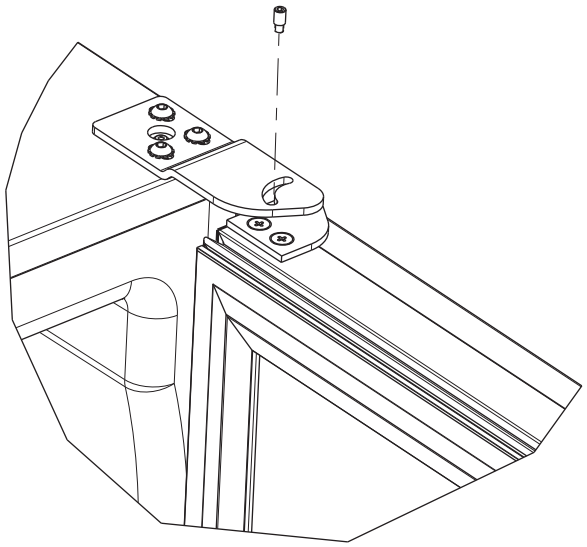

3. On 24" models, a second pin is included for the bottom hinge. Repeat steps above for second hinge.

NOTE: Threaded pin will be inserted from the bottom.

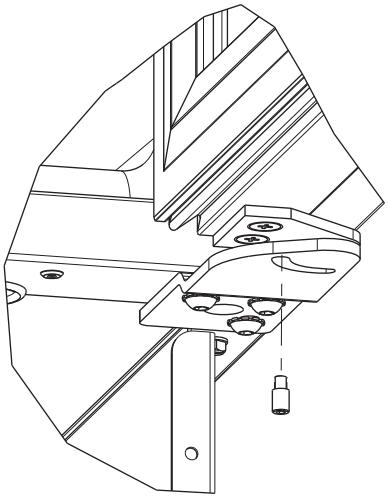

4. Carefully slide your unit back in place.

NOTICE

The pin can be removed to return the door swing back to its original state by unscrewing the threaded pin.

Door Adjustments

DOOR ALIGNMENT AND ADJUSTMENT

Align and adjust the door if it is not level or is not sealing properly. If the door is not sealed, the unit may not cool properly, or excessive frost may form in the interior.

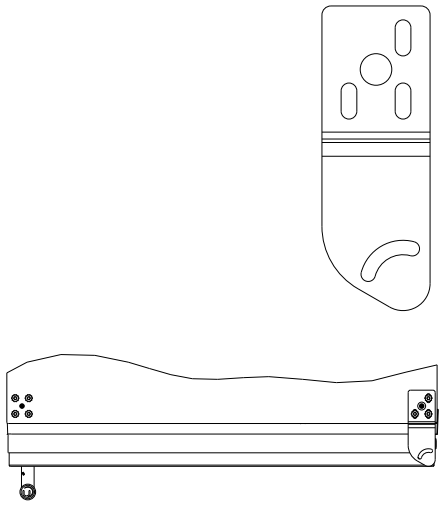

NOTICE

Properly aligned, the door's gasket should be firmly in contact with the cabinet all the way around the door (no gaps). Carefully examine the door's gasket to ensure that it is firmly in contact with the cabinet. Also make sure the door gasket is not pinched on the hinge side of the door.

To align and adjust the door:

1. Loosen (do not remove) top and bottom hinge screws.
2. Align door squarely with cabinet.
3. Make sure gasket is firmly in contact with cabinet all the way around the door (no gaps).
4. Tighten bottom hinge screws.
5. Tighten top hinge screws.

REVERSING THE DOOR

Location of the unit may make it desirable to mount the door on the opposite side of the cabinet.

The hinge hardware will be removed and reinstalled on the opposite side of the cabinet.

TO REVERSE THE DOOR

Remove grille:

Remove the grille (see GRILLE-PLINTH INSTALLATION section of this guide).

Remove top hinge and door:

1. Hold door to keep it from falling.
2. Remove top hinge from cabinet by removing three screws.

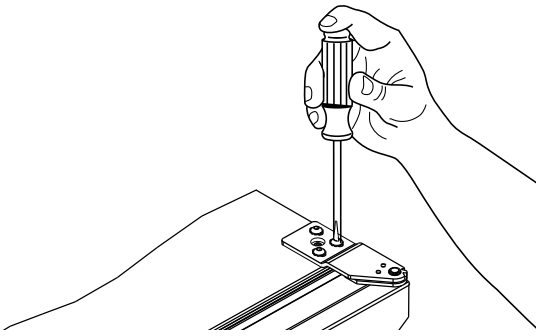

3. Remove door by tilting forward and lifting door off bottom hinge. Retain shoulder washer; it will be reused.

4. Remove four screws from hinge holes on the opposite side. Reinstall into holes where the hinge was removed. Take care not to scratch cabinet.

Remove bottom hinge:

1. Remove bottom hinge from cabinet.

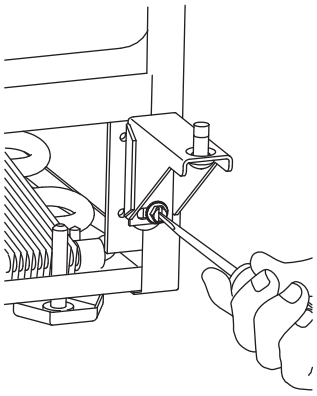

2. Remove corresponding screws on opposite side of cabinet. On some models there may be a nut behind one or both screws on either side.

Install bottom hinge:

Install two or three screws, depending on model. Replace nuts if used.

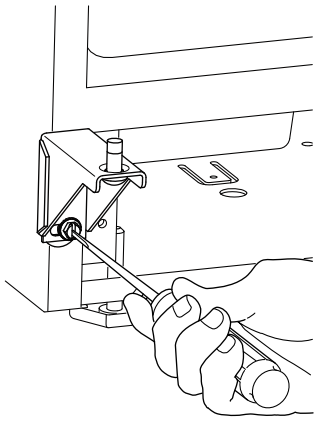

Prepare door for reinstallation:

1. Rotate door 180° to reverse.

2. Remove gasket center strip and apply in-line with new opening (approximately 2" lower).

Install top hinge and door:

1. Turn the plate over and reinstall the screws.

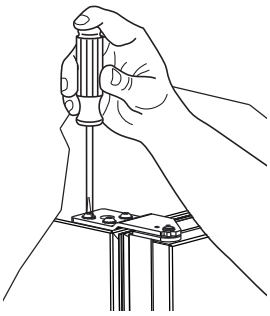

2. Hold door to keep it from falling.

3. Lift the door on to the bottom hinge.

4. Align flat edge of the hinge with the outer edge of the unit.

5. Tighten three screws.

Align and adjust the door:

Align and adjust the door (see DOOR ALIGNMENT AND ADJUSTMENT).

Install grille:

Install the grille.

First Use

All U-Line controls are preset at the factory. Initial startup requires no adjustments.

NOTICE

U-Line recommends discarding the ice produced during the first two to three hours of operation to avoid possible dirt or scale that may dislodge from the water line.

To turn the unit on or off:



Press the rocker switch located inside the door on the front panel, or behind the grille.

Ice

ICE MAKER OPERATION

When the ice bucket is full, the ice making mechanism will shut off. However, the refrigeration system will continue to cool and maintain the ice supply.

NOTICE

Do not place cans or bottles in the ice compartment because they will freeze.

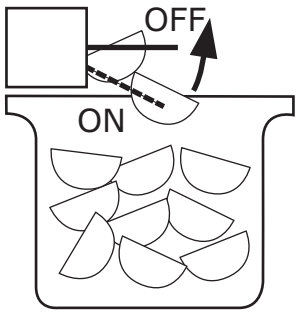

To turn off ice production: Raise the bin arm into an upright and locked position. The unit will preserve temperature for ice storage.

NOTICE

If not intending to use the ice maker turn the water supply valve off, it is important to raise the bin arm of the ice maker (Figure 1). Failure to raise the bin arm may result in damage to the water valve.

Certain sounds are normal during the unit's operation. You may hear the compressor or fan motor, the water valve, or ice dropping into the ice bucket.

⚠ CAUTION

NEVER use an ice pick, knife or other sharp instrument to separate cubes. Shake the ice bucket instead.

During periods of limited use or high ambient temperatures, it is common for cubes to fuse together. Gently shake the bucket to break apart cubes. If not using the ice maker regularly, empty the ice bucket periodically to ensure fresh cubes.

It is normal for cubes to appear cloudy. The cause is air trapped in the water because of fast freezing. It is not caused by the health, taste or chemical make up of the water. It is the same air that is in every glass of water you drink.

Remove the ice bucket for emptying and cleaning. To remove the ice bucket, raise the bin arm and remove the bucket from the ice compartment. Use the ice bucket for ice storage only.

ICE MAKER ADJUSTMENT

Ice Cube Thickness Adjustment

Interval - As Required

On ice maker equipped models, adjust the cube size by changing water amount injected into the ice maker assembly as follows:

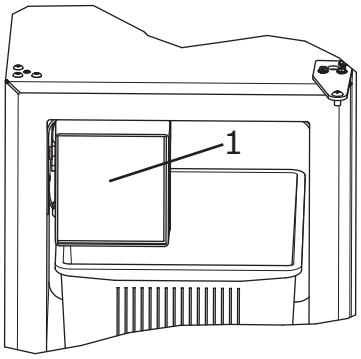

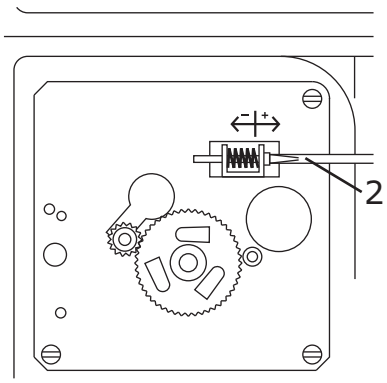

1. Remove the ice maker assembly cover (1).

2. Find the adjusting screw on the ice maker assembly control box (2). The adjusting screw is just below the minus (-) and plus (+) signs on the control box.

⚠ CAUTION

Too large of an adjustment to the screw can cause the water to overflow the ice maker and can cause property damage.

3. Turn the adjusting screw toward the minus (-) sign (clockwise) for smaller cubes or toward the plus (+) sign (counterclockwise) for larger cubes.

4. Install the ice maker assembly cover.

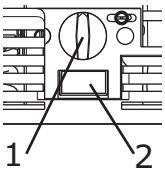

ADJUSTING ICE HARVEST

1. Remove the front grille (see MAINTENANCE).

2. Turn the adjusting knob (3) by hand in a small increment clockwise for a COLDER setting (slower ice production) or counterclockwise for a WARMER setting (faster ice production).

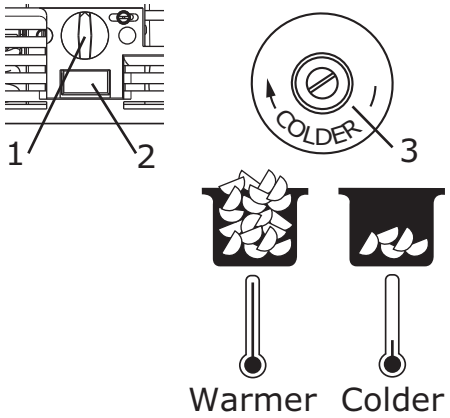

3. Reinstall the front grille (two screws).

Airflow and Product Loading

NOTICE

The unit requires proper airflow to perform at its highest efficiency. Do not block the front grille at any time, or the unit will not perform as expected. Do not install the unit behind a door.

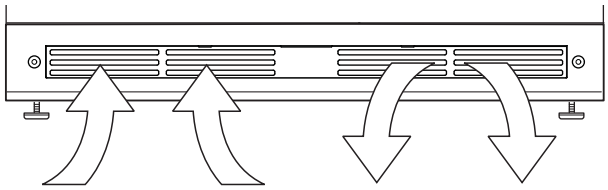

Cleaning

EXTERIOR CLEANING

Vinyl Clad (Black or White) Models

Clean surfaces with a mild detergent and warm water solution. Do not use solvent-based or abrasive cleaners. Use a soft sponge and rinse with clean water. Wipe with a soft, clean towel to prevent water spotting.

Clean any glass surfaces with a non-chlorine glass cleaner.

Stainless Models

Stainless door panels, handles and frames can discolor when exposed to chlorine gas, pool chemicals, saltwater or cleaners with bleach.

Keep your stainless unit looking new by cleaning with a good quality all-in-one stainless steel cleaner and polish monthly. For best results use Claire® Stainless Steel Polish and Cleaner, which can be purchased from U-Line Corporation (Part Number 173348). Comparable products are acceptable. Frequent cleaning will remove surface contamination that could lead to rust. Some installations may require cleaning weekly.

Do not clean with steel wool pads.

Do not use stainless steel cleaners or polishes on any glass surfaces.

Clean any glass surfaces with a non-chlorine glass cleaner.

Do not use cleaners not specifically intended for stainless steel on stainless surfaces (this includes glass, tile and counter cleaners).

If any surface discoloring or rusting appears, clean it quickly with Bon-Ami® or Barkeepers Friend Cleanser® and a nonabrasive cloth. Always clean with the grain. Always finish with Claire Stainless Steel Polish and Cleaner or comparable product to prevent further problems.

Using abrasive pads such as ScotchBrite™ will cause the graining in the stainless to become blurred.

Rust not cleaned up promptly can penetrate the surface of the stainless steel and complete removal of the rust may not be possible.

Integrated Models

To clean integrated panels, use household cleaner per the cabinet manufacturer's recommendations.

INTERIOR CLEANING

Disconnect power to the unit.

Clean the interior and all removed components using a mild nonabrasive detergent and warm water solution applied with a soft sponge or non-abrasive cloth.

Rinse the interior using a soft sponge and clean water.

Do not use any solvent-based or abrasive cleaners. These types of cleaners may transfer taste to the interior products and damage or discolor the interior.

DEFROSTING

Manual Defrost Models

Unit is a manual defrost model and will require occasional defrosting. When there is build-up of 1/4" (6 mm) or more of frost, manually defrost the unit. Defrost every two months minimum.

Ensure the door is closing and sealing properly.

High ambient temperature and excessive humidity can also produce frost.

⚠ CAUTION

DO NOT use an ice pick or other sharp instrument to help speed up defrosting. These instruments can puncture the inner lining or damage the cooling unit. DO NOT use any type of heater to defrost. Using a heater to speed up defrosting can cause personal injury and damage to the inner lining.

To defrost:

1. Disconnect power to the unit.
2. Remove ice bucket and discard ice.
3. Place towel or other absorbent material on bottom of ice bin.
4. Fill the ice bucket half full with warm, not hot water. This will help the unit defrost faster.
5. Place the ice bucket back into the unit on top of the towel or other absorbent material.
6. Prop the door in an open position (2 in. [50 mm] minimum).
7. After about 1 hour remove the ice bin and discard water.
8. Allow the frost to melt naturally.
9. After the frost melts completely clean the interior and all removed components. (See INTERIOR CLEANING).

NOTICE

DO NOT clean ice bucket using a dishwasher. The bucket is not dishwasher safe and will be damaged.

10. When the interior is dry, reconnect power and turn unit on.

NOTE: To safeguard against contaminates in ice, discard first three batches of ice after defrosting.

Cleaning Condenser

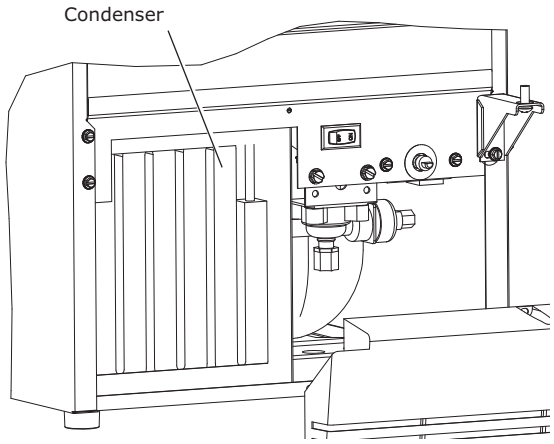

INTERVAL - EVERY SIX MONTHS

To maintain operational efficiency, keep the front grille free of dust and lint, and clean the condenser when necessary. Depending on environmental conditions, more or less frequent cleaning may be necessary.

⚠ WARNING

Disconnect electric power to the unit before cleaning the condenser.

⚠ WARNING

DO NOT touch the condenser fins. The condenser fins are SHARP and can be easily damaged.

NOTICE

DO NOT use any type of cleaner on the condenser unit.

1. Remove the grille. (See GRILLE-PLINTH INSTALLATION).

2. Clean the condenser coil using a using a soft brush with a “combing” action or vacuum cleaner. Do not touch the condenser coil.

3. Install the grille.

Extended Non-Use

VACATION/HOLIDAY, PROLONGED SHUTDOWN

The following steps are recommended for periods of extended non-use:

1. Remove all consumable content from the unit.
2. Disconnect the power cord from its outlet/socket and leave it disconnected until the unit is returned to service.
3. Turn off the water supply.
4. If ice is on the evaporator, allow ice to thaw naturally.
5. Clean and dry the interior of the cabinet. Ensure all water has been removed from the unit.
6. Disconnect the water and drain line (if applicable) making sure all water is removed from the lines.
7. The door must remain open to prevent formation of mold and mildew. Open door a minimum of 2" (50 mm) to provide the necessary ventilation.

WINTERIZATION

If the unit will be exposed to temperatures of 40°F (5°C) or less, the steps above must be followed. In addition, P60 drain pumps in clear ice machines must be drained according to the following procedure:

1. Remove the drain pump from the ice machine.
2. Drain the water in the pump's reservoir by turning the pump upside down and allowing the water to drain through the pump's inlet and vent tube fittings.
3. After water is drained, reinstall the drain pump and reattach all connections.

For questions regarding winterization, please call U-Line at +1.800.779.2547.

⚠ CAUTION

Damage caused by freezing temperatures is not covered by the warranty.

Do not put anti-freeze in your unit.

Accessories

80-51004-00



Accessories - Anti-Tip Mounting Brackets
US$18.99

WATERHOOKUP



Accessories - Braided Water Line Supply Kit
US$49.00

Troubleshooting

BEFORE CALLING FOR SERVICE

If you think your U-Line product is malfunctioning, read the OPERATING INSTRUCTIONS section of this guide to clearly understand the function of the control.

If the problem persists, read the NORMAL OPERATING SOUNDS and TROUBLESHOOTING GUIDE sections below to help you quickly identify common problems, and possible causes and remedies. Most often, this will resolve the problem without the need to call for service.

IF SERVICE IS REQUIRED

If you do not understand a troubleshooting remedy, or your product needs service, contact U-Line Corporation directly. Contact information appears on the rear cover of this guide.

When you call, you will need your product Model and Serial Numbers. This information appears on the Model and Serial number plate located on the upper right or rear wall of the interior of your product.

NORMAL OPERATING SOUNDS

All models incorporate rigid foam insulated cabinets to provide high thermal efficiency and maximum sound reduction for its internal working components. Despite this technology, your model may make sounds that are unfamiliar.

Normal operating sounds may be more noticeable because of the unit's environment. Hard surfaces such as cabinets, wood, vinyl or tiled floors and paneled walls have a tendency to reflect normal appliance operating noises.

Listed below are common refrigeration components with brief description of the normal operating sounds they make. NOTE: Your product may not contain all the components listed.

- Compressor: The compressor makes a hum or pulsing sound that may be heard when it operates.
- Evaporator: Refrigerant flowing through an evaporator may sound like boiling liquid.
- Condenser Fan: Air moving through a condenser may be heard.
- Automatic Defrost Drain Pan: Water may be heard dripping or running into the drain pan when the unit is in the defrost cycle.

TROUBLESHOOTING GUIDE

⚠ DANGER

ELECTROCUTION HAZARD. Never attempt to repair or perform maintenance on the unit until disconnecting the main electrical power.

Troubleshooting - What to check when problems occur:

Problem	Possible Cause and Remedy
Interior Light Does Not Illuminate.	The light bulb may be defective. (See MAINTENANCE)
Light Remains on When Door is Closed.	Turn off light switch if equipped. (See OPERATING INSTRUCTIONS) Adjust light actuator bracket on bottom of door.
Unit Develops Frost on Internal Surfaces.	Frost on the rear wall is normal and will melt during each off cycle. If there is excessive build-up of 1/4" or more, manually defrost the unit. Ensure the door is closing and sealing properly. High ambient temperature and excessive humidity can also produce frost.
Unit Develops Condensation on External surfaces	The unit is exposed to excessive humidity, moisture will dissipate as humidity levels decrease.
Product is Freezing.	Product in contact with the rear wall may freeze, ensure no product is touching the rear wall. Adjust the temperature to a warmer set-point. (See OPERATING INSTRUCTIONS)

Problem	Possible Cause and Remedy
Product is Not Cold Enough.	Air temperature does not indicate product temperature. See OPERATING INSTRUCTIONS - Checking Product Temperature. Adjust the temperate to a cooler set-point. (See OPERATING INSTRUCTIONS) Ensure unit is not located in excessive ambient temperatures or in direct sunlight. Ensure the door is closing and sealing properly. Ensure the interior light has not remained on too long. Ensure nothing is blocking the front grille, found at the bottom of the unit. Ensure the condenser coil is clean and free of any dirt or lint build-up.

CHECKING PRODUCT TEMPERATURE

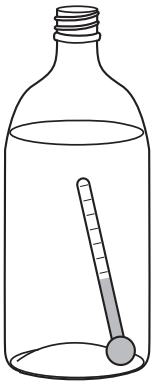

To check the actual product temperature in the unit.

1. Partially fill a plastic (nonbreakable) bottle with water.
2. Insert an accurate thermometer.
3. Tighten the bottle cap securely.
4. Place the bottle in the desired area for 24 hours.
5. Avoid opening the unit during the testing period.
6. After 24 hours, check the temperature of the water. If required, adjust the temperature control in a small increment (See CONTROL OPERATION).

Causes which affect the internal temperatures of the cabinet include:

- Temperature setting.
- Ambient temperature where installed.
- Installation in direct sunlight or near a heat source.
- The number of door openings and the time the door is open.
- The time the internal light is illuminated. (This mainly affects product on the top rack or shelf.)
- The front grille or condenser are obstructed.

Warranty

U-LINE CORPORATION LIMITED WARRANTY

1. U-Line Corporation ("U-Line") warrants each U-Line product to be free from defects in materials and workmanship for a period of one year (two years on Modular 3000 Series) from the date of purchase. U-Line further warrants the sealed system (consisting of the compressor, condenser, evaporator, hot gas bypass valve, dryer, and connecting tube) in each U-Line product to be free from defects in materials and workmanship for a period of five years from the date of purchase.

2. During the initial one year warranty period (two years on Modular 3000 Series) for all U-Line products U-Line shall: (1) repair any product or replace any part of a product; and (2) for all Marine, RV and Domestic U-Line products sold and serviced in the United States (including Alaska and Hawaii) and Canada, U-Line shall be responsible for the labor costs performed by a U-Line authorized service company, incurred in connection with the replacement of any defective part. During years two through five of the warranty period for the sealed system, U-Line shall: (1) at U-Line's option repair or replace any part of the sealed system; and (2) for all Marine, RV and Domestic U-Line products sold and serviced in the United States (including Alaska and Hawaii) and Canada, U-Line shall be responsible for the labor costs incurred in connection with the replacement of any defective part of the sealed system. All other charges, including transportation charges for replacements under this warranty and labor costs not specifically covered by this warranty, shall be the responsibility of the purchaser. This warranty extends only to the original purchaser of the U-Line product. The Product Registration Card included with the product should be promptly completed by you and mailed back to U-Line or you can register on-line at www.u-lineservice.com.

3. The warranty listed above does not apply to floor display models. The warranty for these models shall be 30 days from the date of retail purchase and only if U-Line's Product Registration Card included with the unit is completed and mailed back or electronically submitted to U-Line. This 30 day warranty does not apply to cosmetic damages. A proof of purchase may be required.

4. The following conditions are excluded from this limited warranty: use of cleaners other than the recommended stainless steel cleaners and U-Line Clear Ice Maker cleaner; installation charges; damages caused by disasters or acts of God, such as fire, floods, wind and lightning; damages incurred or resulting from shipping, improper installation, unauthorized modification, or misuse/abuse of the product; customer education calls; food loss and spoilage; door and water level adjustments (except during the first 30 days from the date of installation); defrosting the product; adjusting the controls; door reversal; and cleaning the condenser.

5. U-Line product are designed to operate in ambient temperatures between 50°F and 100°F unless otherwise noted in the product manual. Exposure to temperatures outside this range may cause degradation of performance and issue such as lower ice production or spoiled contents are not covered under the terms of this warranty as a result of that exposure. U-Line product may not be subjected to temperatures below 40F without following the winterization and vacation shutdown procedures in your product manual.

6. U-Line's Outdoor Limited Warranty, set forth in this Paragraph 6 shall apply to U-Line models deemed suitable for outdoor use by Underwriters Laboratory ("UL") as noted in the U-Line Product Catalog, U-Line's website and/or on the serial tag located inside the product.

   A. Outdoor product may come into contact with rain by virtue of outdoor use. Exposure to other sources of water shall also cause this warranty to be void, including flooding of the area in proximity of the unit greater than 1/8" deep in water, hurricanes, splashing of pool water, or directing a spray from a hose or similar device into and around the unit.

7. If a product defect is discovered during the applicable warranty period, you must promptly notify either U-Line at 8900 N. 55th Street, Milwaukee, Wisconsin 53223 USA or at +1.800.779.2547 or the dealer from whom you purchased the product. In no event shall such notification be received later than 30 days after the expiration of the applicable warranty period. U-Line may require that defective parts be returned, at your expense, to U-Line's factory in Milwaukee, Wisconsin, for inspection. Any action by you for breach of warranty must be commenced within one year after the applicable warranty period.

8. THIS LIMITED WARRANTY IS IN LIEU OF ANY AND ALL OTHER WARRANTIES, EXPRESS OR IMPLIED, INCLUDING ANY IMPLIED WARRANTY OF MERCHANTABILITY OR IMPLIED WARRANTY OF FITNESS FOR A PARTICULAR PURPOSE, ALL OF WHICH ARE DISCLAIMED. U-Line's sole liability and your exclusive remedy under this warranty is set forth in the paragraphs above. U-Line shall have no liability whatsoever for any incidental, consequential or special damages arising from the sale, use or installation of the product or from any other cause whatsoever, whether based on warranty (express or implied) or otherwise based on contract, tort or any other theory of liability.

Some states do not allow limitations on how long an implied warranty lasts or the exclusion or limitation of incidental or consequential damages, so the above limitations may not apply to you. This warranty gives you specific legal rights, and you may also have other rights which vary from state to state.

Warranty 6/2014 Rev.G