QUICK START GUIDE








Ice Makers • 115 V / 60 Hz

QUICK START GUIDE

U-LINE
u-line.com

WELCOME TO U-LINE

Congratulations on your U-Line purchase. Your product comes from a company with over five decades and three generations of premium modular ice making, refrigeration, and wine preservation experience. U-Line continues to be the American leader, delivering versatility and flexibility for multiple applications including residential, light commercial, outdoor and marine use. U-Line's complete product collection includes modular Wine Captain® Models, Beverage Centers, Clear Ice Machines, Crescent Ice Makers, Glass & Solid Door Refrigerators, Refrigerator Drawers, Freezers, and Combo® Models.

U-Line has captivated those with an appreciation for the finer things with exceptional functionality, style, inspired innovations and attention to even the smallest details. We are known and respected for our unwavering dedication to product design, quality and selection. U-Line is headquartered in Milwaukee, Wisconsin with a west coast office located in Laguna Beach, California and European support in Dublin, Ireland. U-Line has shipped product to five continents for over two decades and is proud to have the opportunity to ship to you.

PRODUCT INFORMATION

Looking for additional information on your product? User Guides, Quick Reference Guides, CAD Drawings, Integrated Panel Instructions, Compliance Documentation and Product Warranty information are all available for reference and download at u-line.com under Documentation.

PROPERTY DAMAGE / INJURY CONCERNS

In the unlikely event property damage or personal injury is suspected related to a U-Line product, please take the following steps:

1. U-Line Customer Care must be contacted immediately at +1.800.779.2547.
2. Service or repairs performed on the unit without prior written approval from U-Line is not permitted. If the unit has been altered or repaired in the field without prior written approval from U-Line, claims will not be eligible.

SERVICE INFORMATION

Answers to Customer Frequently Asked Questions are available at u-line.com under Customer Care or you may contact our Customer Care group directly, contact information below.

GENERAL INQUIRIES

U-Line Corporation
8900 N. 55th Street
Milwaukee, Wisconsin 53223 USA
Monday - Friday 8:00 am to 4:30 pm CST
T: +1.414.354.0300
F: +1.414.354.7905
Email: sales@u-line.com
u-line.com

SERVICE & PARTS ASSISTANCE

Monday - Friday 8:00 am to 5:30 pm CST
T: +1.800.779.2547
F: +1.414.354.5696
Service Email: onlineservice@u-line.com
Parts Email: onlineparts@u-line.com

CONNECT WITH US

Designed, engineered and assembled in WI, USA

Contents

1 Model List
3 Safety and Warning
3 Environmental Requirements
4 Water Hookup
7 Door Swing
7 General Installation
8 First Use
8 Ice
9 Warranty

Model List

This guide provides the basics to get you started. Looking for more information? Visit u-line.com to view detailed User Guides for all U-Line products.



Crescent Ice Makers

U-BI1215S-00A

U-BI1215INT-00A

U-BI1215B-00A

U-BI1215W-00A



ADA Series

U-BI95B-00A

U-BI95W-00A

U-BI98B-00A

U-BI98W-00A

U-ADA15IMS-00A

U-ADA15IMB-00A



Outdoor Series

U-BI1215SOD-00A



Marine Series

ULN-BI95FCB-03A
ULN-BI95FCB-20A
ULN-WH95FC-03A
ULN-WH95FC-20A
ULN-SS1095FC-03A
ULN-SS1095FC-20A
ULN-SS1095FD-03A
ULN-SS1095FD-20A
ULN-SS1095NF-03A
ULN-SS1095NF-20A



ULN-SP18FCS-03A
ULN-SP18FCS-20A
ULN-SP18FCB-03A
ULN-SP18FCB-20A
ULN-SP18FCW-03A
ULN-SP18FCW-20A



ULN-SS98NF-03A
ULN-SS98NF-20A

Visit **http://www.u-line.com/product-literature/userguides** or scan this QR code to view all user guides online.

Safety and Warning

NOTICE

PLEASE READ all instructions before installing, operating, or servicing the appliance.

Use this appliance for its intended purpose only and follow these general precautions with those listed throughout this guide:

SAFETY ALERT DEFINITIONS

Throughout this guide are safety items labeled with a Danger, Warning or Caution based on the risk type:

⚠ DANGER

Danger means that failure to follow this safety statement will result in severe personal injury or death.

⚠ WARNING

Warning means that failure to follow this safety statement could result in serious personal injury or death.

⚠ CAUTION

Caution means that failure to follow this safety statement may result in minor or moderate personal injury, property or equipment damage.

Environmental Requirements

This unit is designed to operate between 50°F (10°C) and 100°F (38°C). Higher ambient temperatures may reduce the unit's ability to reach low temperatures and/or reduce ice production on applicable models.

For best performance, keep the unit out of direct sunlight and away from heat generating equipment.

In climates where high humidity and dew points are present, condensation may appear on outside surfaces. This is considered normal. The condensation will evaporate when the humidity drops.

⚠ CAUTION

Damages caused by ambient temperatures of 40°F (5°C) or below are not covered by the warranty.

Water Hookup

FRONT MOUNTED VALVE

PREPARE PLUMBING

Please use a braided stainless steel water supply line. P/N (WATERHOOKUP).

⚠ CAUTION

Plumbing installation must observe all state and local codes. All water and drain connections MUST BE made by a licensed/qualified plumbing contractor. Failure to follow recommendations and instructions may result in damage and/or harm.

Water Supply Connection

When connecting the water supply, please note the following:

- Before installing the unit and connecting to the cold water supply, review the local plumbing codes.
- The water pressure should be between 20 and 120 psi.
- The water line MUST have a shut-off valve in the supply line.
- The water line should be looped into 2 coils. This will allow the unit to be removed for cleaning and servicing. However, make certain that the tubing is not pinched or damaged during installation.

⚠ CAUTION

Do not use any plastic water supply line. The line is under pressure at all times. Plastic may crack or rupture with age and cause damage to your home.

Do not use Teflon tape or joint compound on the water fitting. The rubber washer provides an adequate seal. Other materials could cause blockage of the valve.

Failure to follow recommendations and instructions may result in damage and/or harm, flooding or void the product warranty.

⚠ CAUTION

Turn off water supply and disconnect electrical supply to unit prior to installation.

Use caution when handling back panel. The edges could be sharp.

1. Turn off water supply and disconnect electrical supply to product prior to attempting installation.
2. Remove the grille/access panel in the front and the back panel.
3. Locate water valve in the front of the unit and thread water supply line through.

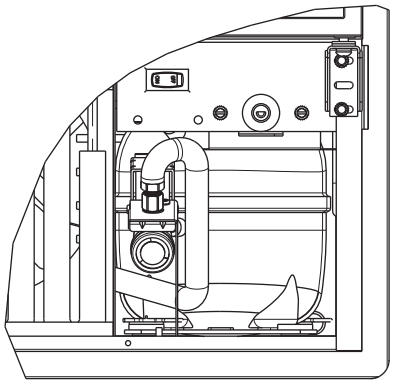

NOTICE

Route the water supply line through the unit so it does not come into contact with any internal components other than the solenoid valve. Normal operation creates some vibration. A water supply line contacting an internal component or cabinet wall can cause excessive noise during operation or damage to the line.

4. On the back panel, break away filler feature in bushing, with flat screwdriver.

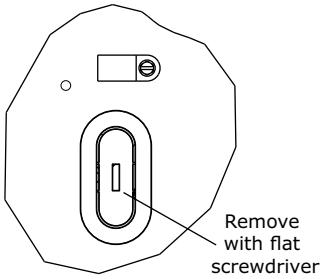

5. Thread water line through back panel hole (with bushing).

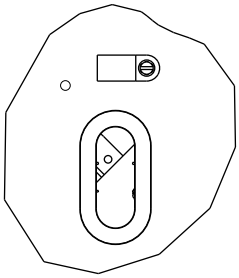

6. Turn on water supply and check for leaks.

7. Reinstall back panel and grille/front access panel.

8. Install retaining clip.

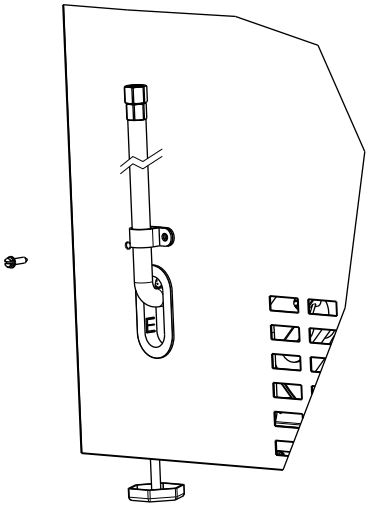

REAR MOUNTED VALVE

PREPARE PLUMBING

Please use a braided stainless steel water supply line. P/N (WATERHOOKUP).

⚠ CAUTION

Plumbing installation must observe all state and local codes. All water and drain connections MUST BE made by a licensed/qualified plumbing contractor. Failure to follow recommendations and instructions may result in damage and/or harm.

Water Supply Connection

When connecting the water supply, please note the following:

- Before installing the unit and connecting to the cold water supply, review the local plumbing codes.
- The water pressure should be between 20 and 120 psi.
- The water line MUST have a shut-off valve in the supply line.
- The water line should be looped into 2 coils. This will allow the unit to be removed for cleaning and servicing. However, make certain that the tubing is not pinched or damaged during installation.

⚠ CAUTION

Do not use any plastic water supply line. The line is under pressure at all times. Plastic may crack or rupture with age and cause damage to your home.

Do not use Teflon tape or joint compound on the water fitting. The rubber washer provides an adequate seal. Other materials could cause blockage of the valve.

Failure to follow recommendations and instructions may result in damage and/or harm, flooding or void the product warranty.

⚠ CAUTION

Turn off water supply and disconnect electrical supply to unit prior to installation.

Use caution when handling back panel. The edges could be sharp.

1. Turn off water supply and disconnect electrical supply to product prior to attempting installation.

2. Remove the back panel.

3. Locate water valve inlet.

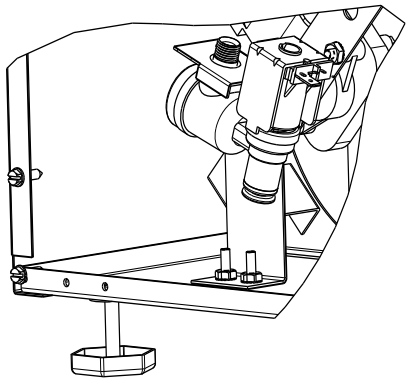

4. Break away filler feature in bushing, with flat screwdriver.

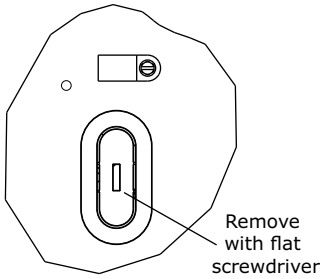

5. Thread water line through back panel hole (with bushing).

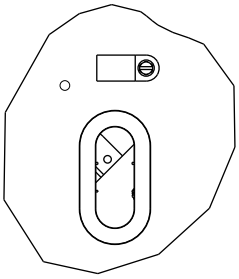

6. Locate water valve inlet and connect to valve.

7. Turn on water supply and check for leaks.

8. Reinstall back panel.

9. Install retaining clip.

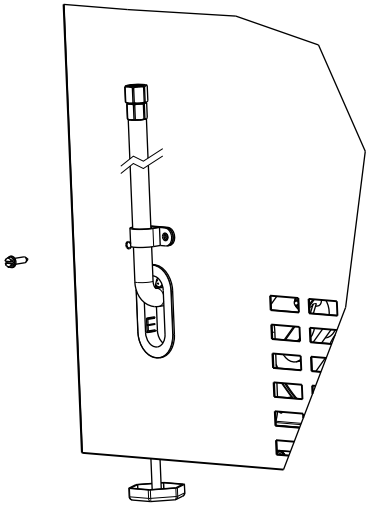

Door Swing

1200 SERIES

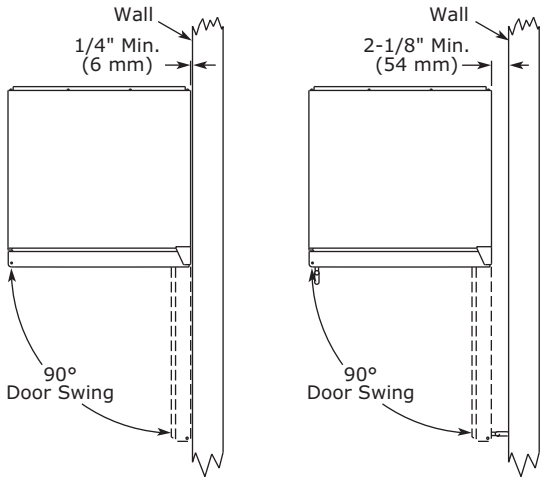

Units have a zero clearance for the door to open 90°, when installed adjacent to cabinets.

Stainless Steel and black and white models require 2-1/8" (54 mm) door clearance to accommodate the handle if installed next to a wall.

Integrated models require 1/4" (6 mm) clearance if installed next to a wall. Allow for additional space for any knobs or pulls installed on the integrated panel/frame.

BI SERIES

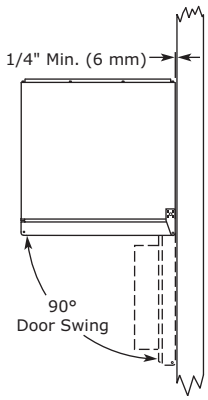

All units have a zero clearance for the door to open 90°. U-Line recommends a minimum door clearance of 1/4" (6 mm) to accommodate the handle if the unit is installed next to a wall.

MARINE SERIES

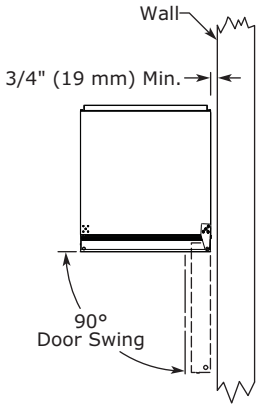

All units have a zero clearance for the door to open 90°. U-Line recommends a minimum door clearance of 3/4" (19 mm) to accommodate the handle if the unit is installed next to a wall or similar type of structure.

General Installation

MARINE AND BI SERIES

LEVELING INFORMATION

NOTICE

It is extremely important that these units sit on a level surface, as they do not have feet levelers. If they are not level, the ice mold will not fill evenly.

Use a level to confirm the unit is level. Level should be placed along top edge and side edge as shown.

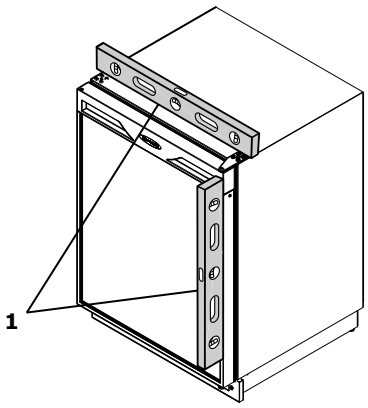

1200 SERIES

LEVELING INFORMATION

1. Use a level to confirm the unit is level. Level should be placed along top edge and side edge as shown.

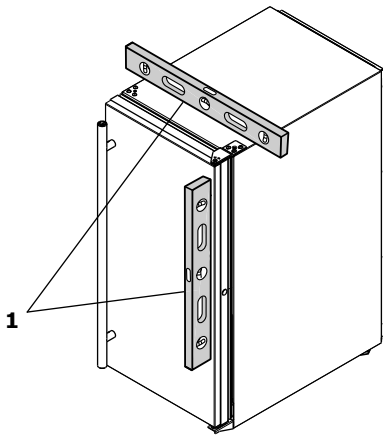

2. If the unit is not level, adjust the feet on the corners of the unit as necessary.

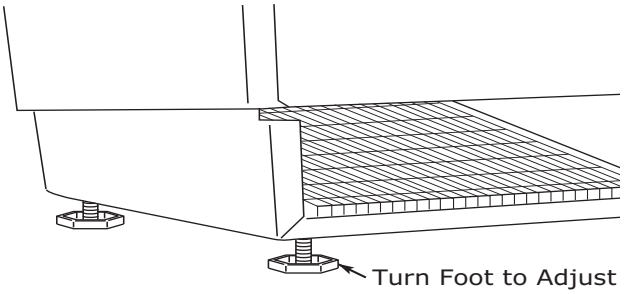

3. Confirm the unit is level after each adjustment and repeat the previous steps until the unit is level.

INSTALLATION TIP

If the room floor is higher than the floor in the cut-out opening, adjust the rear feet to achieve a total unit rear height of 1/8" (3 mm) less than the opening's rear height. Shorten the unit height in the front by adjusting the front feet. This allows the unit to be gently tipped into the opening. Readjust the front feet to level the unit after it is correctly positioned in the opening.

INSTALLATION

1. Open the water supply valve in the main water source.

2. Plug in the power cord.

3. Gently push the unit into position. Be careful not to kink the water supply line or entangle the power cord.

4. Re-check the leveling, from front to back and side to side. Make any necessary adjustments. The unit's top surface should be approximately 1/8" (3 mm) below the countertop.

First Use

All U-Line controls are preset at the factory. Initial startup requires no adjustments.

NOTICE

U-Line recommends discarding the ice produced during the first two to three hours of operation to avoid possible dirt or scale that may dislodge from the water line.

To turn the unit on or off:



Press the rocker switch located inside the door on the front panel, or behind the grille.

Ice

ICE MAKER OPERATION

When the ice bucket is full, the ice making mechanism will shut off. However, the refrigeration system will continue to cool and maintain the ice supply.

NOTICE

Do not place cans or bottles in the ice compartment because they will freeze.

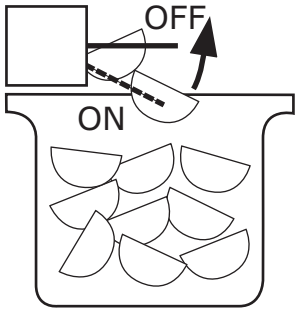

To turn off ice production: Raise the bin arm into an upright and locked position. The unit will preserve temperature for ice storage.

NOTICE

If not intending to use the ice maker, turn the water supply valve off. It is also important to raise the bin arm of the ice maker (see above). Failure to raise the bin arm may result in damage to the water valve.

Certain sounds are normal during the unit's operation. You may hear the compressor or fan motor, the water valve, or ice dropping into the ice bucket.

⚠ CAUTION

NEVER use an ice pick, knife or other sharp instrument to separate cubes. Shake the ice bucket instead.

During periods of limited use or high ambient temperatures, it is common for cubes to fuse together. Gently shake the bucket to break apart cubes. If not using the ice maker regularly, empty the ice bucket periodically to ensure fresh cubes.

It is normal for cubes to appear cloudy. The cause is air trapped in the water because of fast freezing. It is not caused by the health, taste or chemical make up of the water. It is the same air that is in every glass of water you drink.

Remove the ice bucket for emptying and cleaning. To remove the ice bucket, raise the bin arm and remove the bucket from the ice compartment. Use the ice bucket for ice storage only.

Warranty

U-LINE CORPORATION LIMITED WARRANTY

1. U-Line Corporation ("U-Line") warrants each U-Line product to be free from defects in materials and workmanship for a period of one year (two years on Modular 3000 Series) from the date of purchase. U-Line further warrants the sealed system (consisting of the compressor, condenser, evaporator, hot gas bypass valve, dryer, and connecting tube) in each U-Line product to be free from defects in materials and workmanship for a period of five years from the date of purchase.

2. During the initial one year warranty period (two years on Modular 3000 Series) for all U-Line products U-Line shall: (1) repair any product or replace any part of a product; and (2) for all Marine, RV and Domestic U-Line products sold and serviced in the United States (including Alaska and Hawaii) and Canada, U-Line shall be responsible for the labor costs performed by a U-Line authorized service company, incurred in connection with the replacement of any defective part. During years two through five of the warranty period for the sealed system, U-Line shall: (1) at U-Line's option repair or replace any part of the sealed system; and (2) for all Marine, RV and Domestic U-Line products sold and serviced in the United States (including Alaska and Hawaii) and Canada, U-Line shall be responsible for the labor costs incurred in connection with the replacement of any defective part of the sealed system. All other charges, including transportation charges for replacements under this warranty and labor costs not specifically covered by this warranty, shall be the responsibility of the purchaser. This warranty extends only to the original purchaser of the U-Line product. The Product Registration Card included with the product should be

promptly completed by you and mailed back to U-Line or you can register on-line at www.u-lineservice.com.

3. The warranty listed above does not apply to floor display models. The warranty for these models shall be 30 days from the date of retail purchase and only if U-Line's Product Registration Card included with the unit is completed and mailed back or electronically submitted to U-Line. This 30 day warranty does not apply to cosmetic damages. A proof of purchase may be required.

4. The following conditions are excluded from this limited warranty: use of cleaners other than the recommended stainless steel cleaners and U-Line Clear Ice Maker cleaner; installation charges; damages caused by disasters or acts of God, such as fire, floods, wind and lightning; damages incurred or resulting from shipping, improper installation, unauthorized modification, or misuse/abuse of the product; customer education calls; food loss and spoilage; door and water level adjustments (except during the first 30 days from the date of installation); defrosting the product; adjusting the controls; door reversal; and cleaning the condenser.

5. U-Line products are designed to operate in ambient temperatures between 50°F and 100°F unless otherwise noted in the product manual. Exposure to temperatures outside this range may cause degradation of performance and issues such as lower ice production or spoiled contents that are not covered under the terms of this warranty as a result of that exposure. U-Line product may not be subjected to temperatures below 40°F without following the winterization and vacation shutdown procedures in the user guide.

6. U-Line's Outdoor Limited Warranty, set forth in this Paragraph 6, shall apply to U-Line models deemed suitable for outdoor use by Underwriters Laboratory ("UL") as noted in the U-Line Product Catalog, U-Line's website and/or on the serial tag located inside the product.

   A. Outdoor product may come into contact with rain by virtue of outdoor use. Exposure to other sources of water shall also cause this warranty to be void, including flooding of the area in proximity of the unit greater than 1/8" deep in water, hurricanes, splashing of pool water, or directing a spray from a hose or similar device into and around the unit.

7. If a product defect is discovered during the applicable warranty period, you must promptly notify either U-Line at 8900 N. 55th Street, Milwaukee, Wisconsin 53223 USA or at +1.800.779.2547 or the dealer from whom you purchased the product. In no event shall such notification be received later than 30 days after the expiration of the applicable warranty period. U-Line may require that defective parts be returned, at your expense, to U-Line's factory in Milwaukee, Wisconsin, for inspection. Any action by you for breach of warranty must be commenced within one year after the applicable warranty period.

8. THIS LIMITED WARRANTY IS IN LIEU OF ANY AND ALL OTHER WARRANTIES, EXPRESS OR IMPLIED, INCLUDING ANY IMPLIED WARRANTY OF MERCHANTABILITY OR IMPLIED WARRANTY OF FITNESS FOR A PARTICULAR PURPOSE, ALL OF WHICH ARE DISCLAIMED. U-Line's sole liability and your exclusive remedy under this warranty are set forth in the paragraphs above. U-Line shall have no liability whatsoever for any incidental, consequential or special damages arising from the sale, use or installation of the product or from any other cause whatsoever, whether based on warranty (express or implied) or otherwise based on contract, tort or any other theory of liability.

Some states do not allow limitations on how long an implied warranty lasts or the exclusion or limitation of incidental or consequential damages, so the above limitations may not apply to you. This warranty gives you specific legal rights, and you may also have other rights which vary from state to state.

Warranty 6/2014 Rev.G

Copyright © 2014 U-Line Corporation. All Rights Reserved.
Publication Number 30422 8/2014 Rev.A